Photonics in Telecom Satellite Platforms and Launchers

Iain McKenzie
Trieste
20/02/2015

2015 International Year of Light

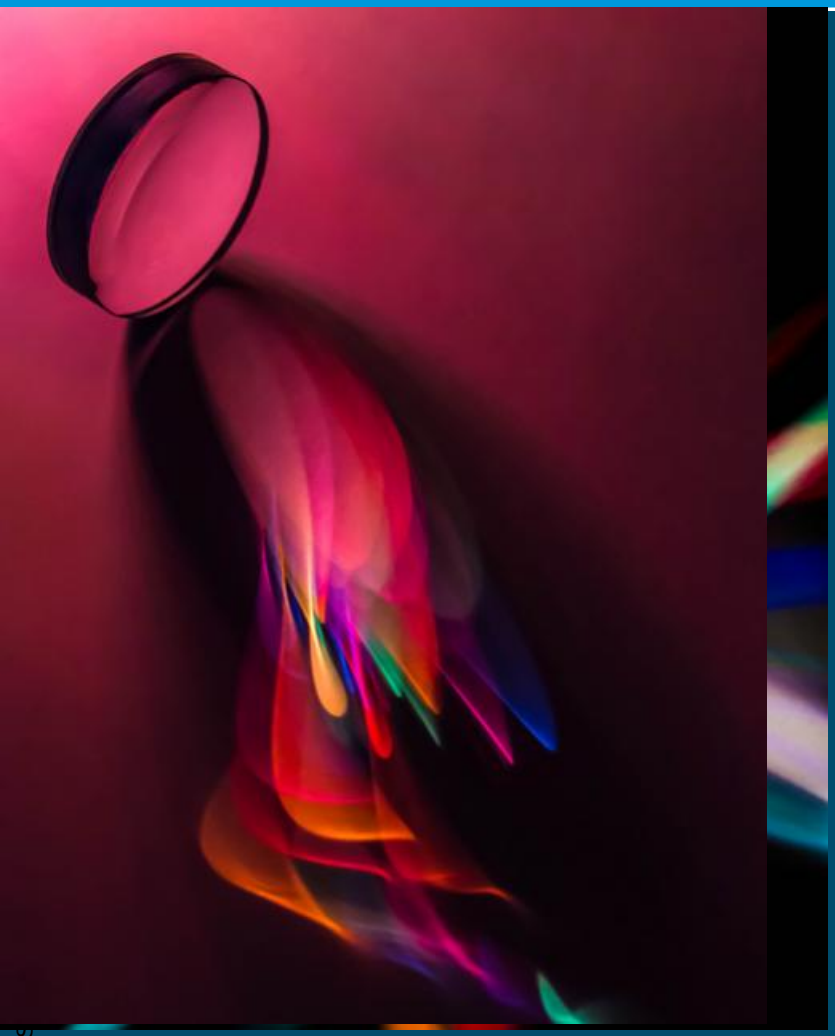

A year to focus on light science and its applications.

- History of light science
- The impact of light on modern society
    - Communications
    - Energy
    - Medicine
    - Lighting
    - Industrial
    - Space/Astronomy

UN International Year of Light Event Programme
http://www.light2015.org/Home/Event-Programme.html

Images courtesy of The Optical Society of America
http://www.osa-opn.org/home/gallery/

Telecom Satellite Assembly Integration and Test

- Mass of 2000kg-6000kg
- Power requirement of some kWs
- Several meters in height
- Several 10s m^2 solar panels
- Large antennas for broadcasting telecommunication signals to ground

http://videos-en.space-airbusds.com/#/video/02f5319ad62s

Telecom Satellite Avionics

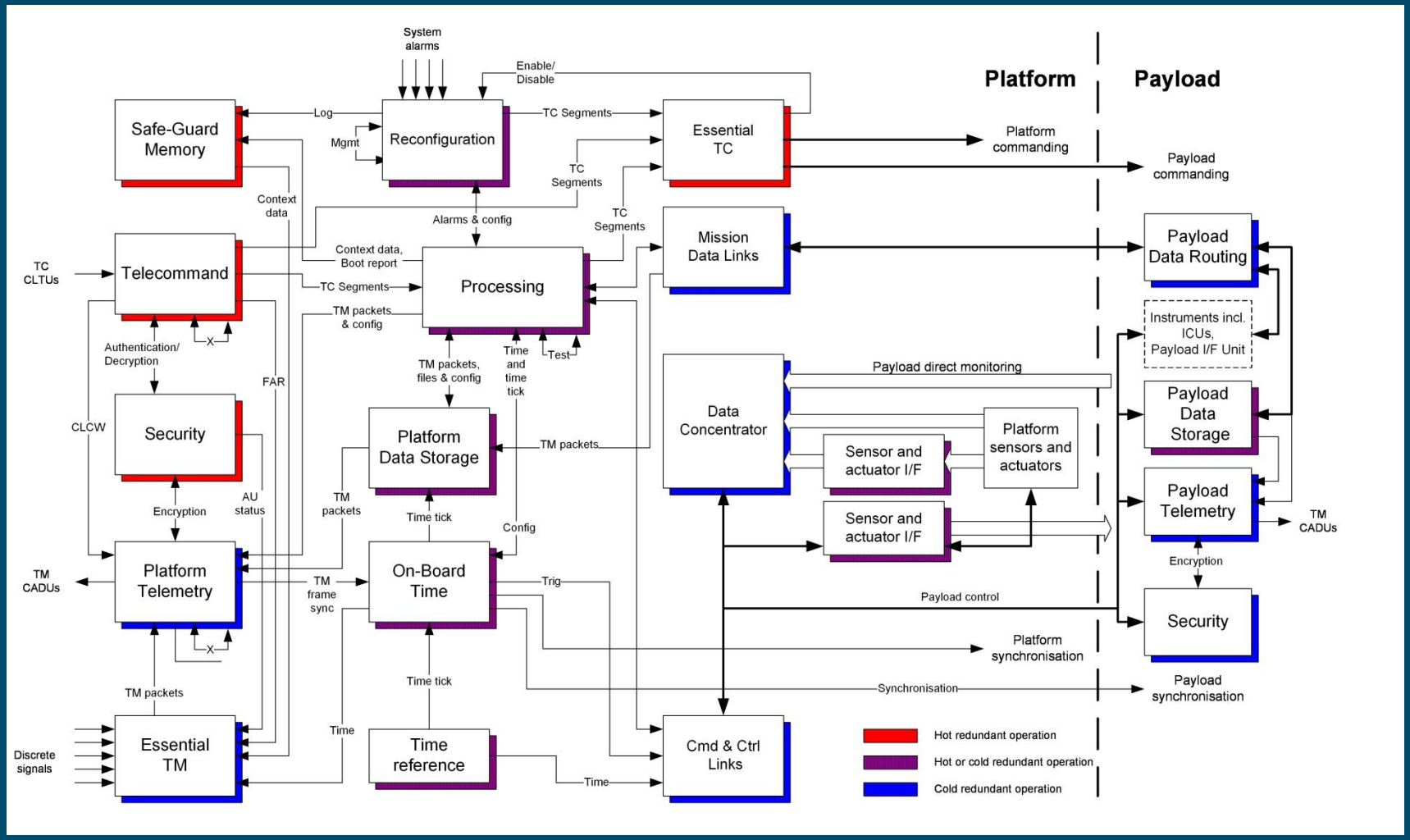

Telecom Satellite Avionics – System Buses

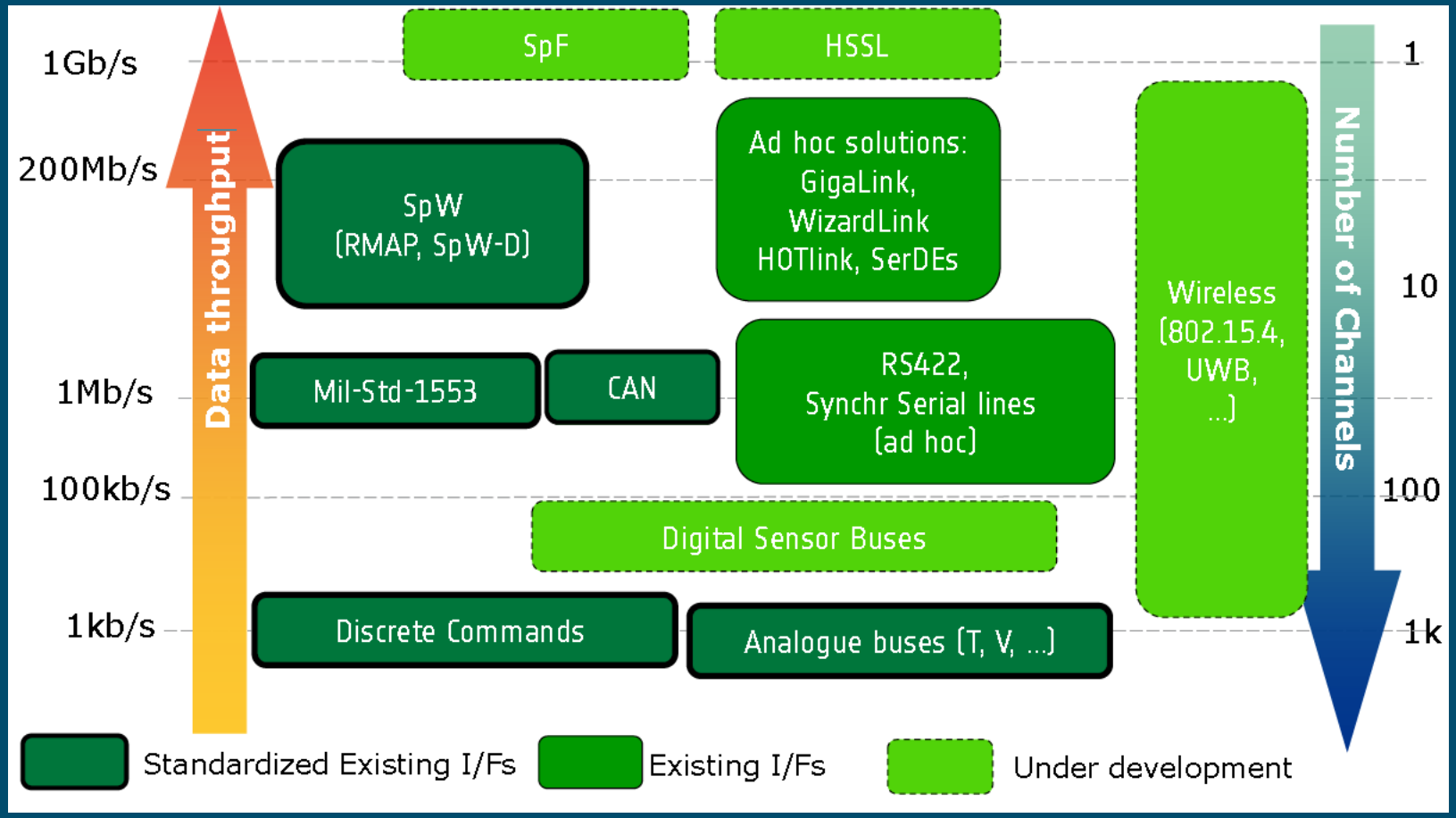

The Cost Challenge

- Reduce Cost
  - Reduce the number of different components
  - Use COTS or modified COTS components
  - AIT effort
- Reduce Harness
  - Connector size
  - Harness mass
  - Multiplexing of functions.

Motivation for the Introduction of Fibre Optic Technology

- Harness reduction
  - Flexible, small, light weight harness
  - Wavelength multiplexing (sensors, functions)
  - Can be embedded in composites or panels
- Harness immune to EMI with excellent EMC
- Extremely Low Optical Transmission Loss
- Galvanic isolation
- Low thermal conductivity of optical fibres
- Multi-parameter measurement
- Performance (FOG)
- Cost - mature high quality COTS components from telecom

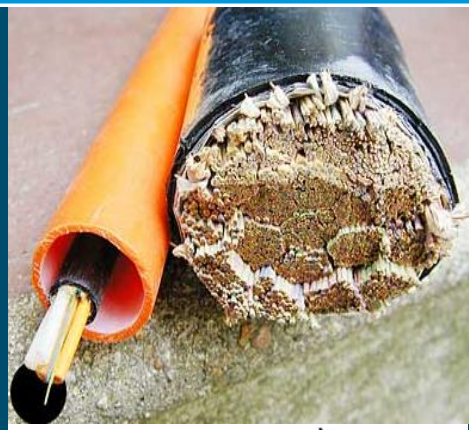

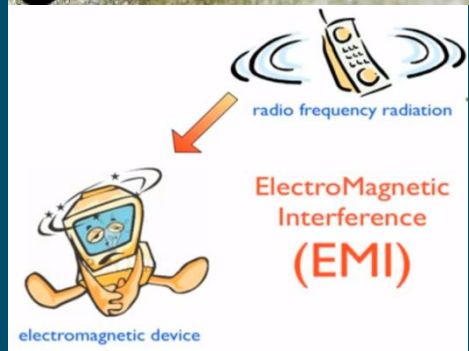

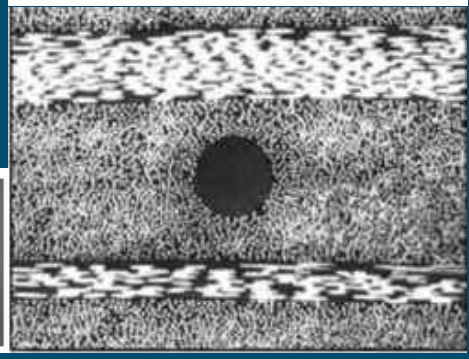

Photonics on platforms

- Sensors
  - Fibre Optic Gyro
  - Fibre Bragg Gratings
- Fiber Optic Digital Communications
- Opto-couplers
- Star Trackers
- Sun Sensors
- Optopyrotechnics
- Photonically Wired Spacecraft Panels

Why Fiber Optic Gyro Technology?

- Solid state technology advantages over mechanical gyros
  - No Moving Parts (no wear out effect)
  - High Stability over time and temperature
  - High Reliability, Long MTBF
  - Low Sensitivity to Environmental factors (vibration, shock, acceleration)
- A family of gyros possible covering a wide range of performances simply by changing the fiber loop length.
- ITAR free European solution
- Co-developed by ESA and CNES (Planck, Pleiades and Alphabus Programs)

I-FOG Principle

Sangnac Effect observed by French scientist Georges Sagnac (1913)

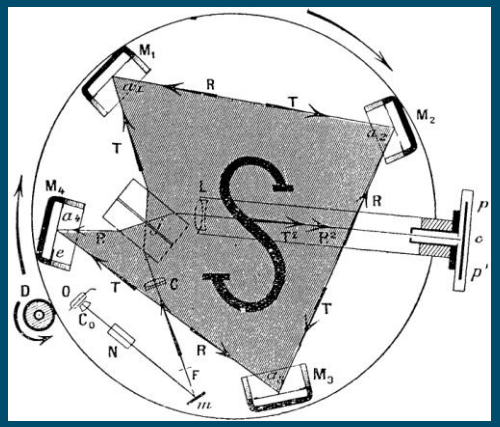

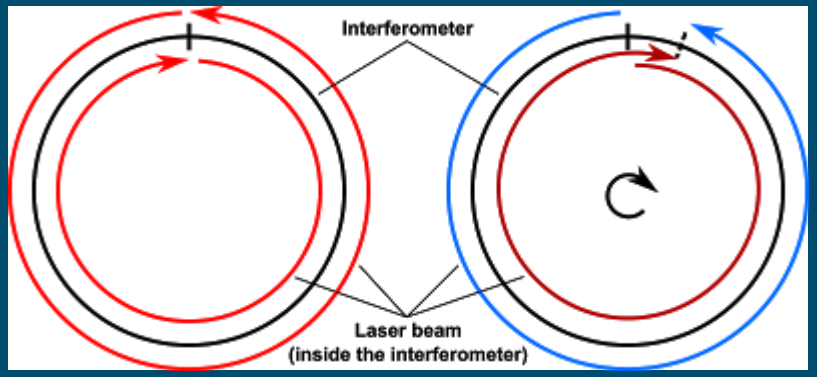

Georges M.M. Sagnac, "L'éther lumineux démontré par l'effet du vent relatif d'éther dans un interféromètre en rotation uniforme." *C. R. Acad. Sci.* 157, no. 17 (1913): 708-10

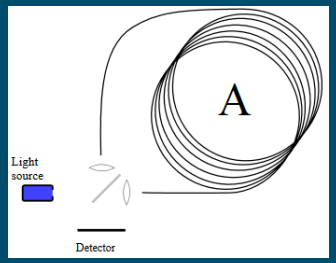

$$\Delta\phi = \frac{2\pi L D}{\lambda c}\Omega$$

Astrix FOG Architecture

Modular approach for each axis:

LiNbO3 Integrated Chip

PM Optical Fiber Coil

Erbium fibre broadband optical source:
Pump laser diode
Er doped fiber
FBG
Fiber isolator

PIN FET receiver

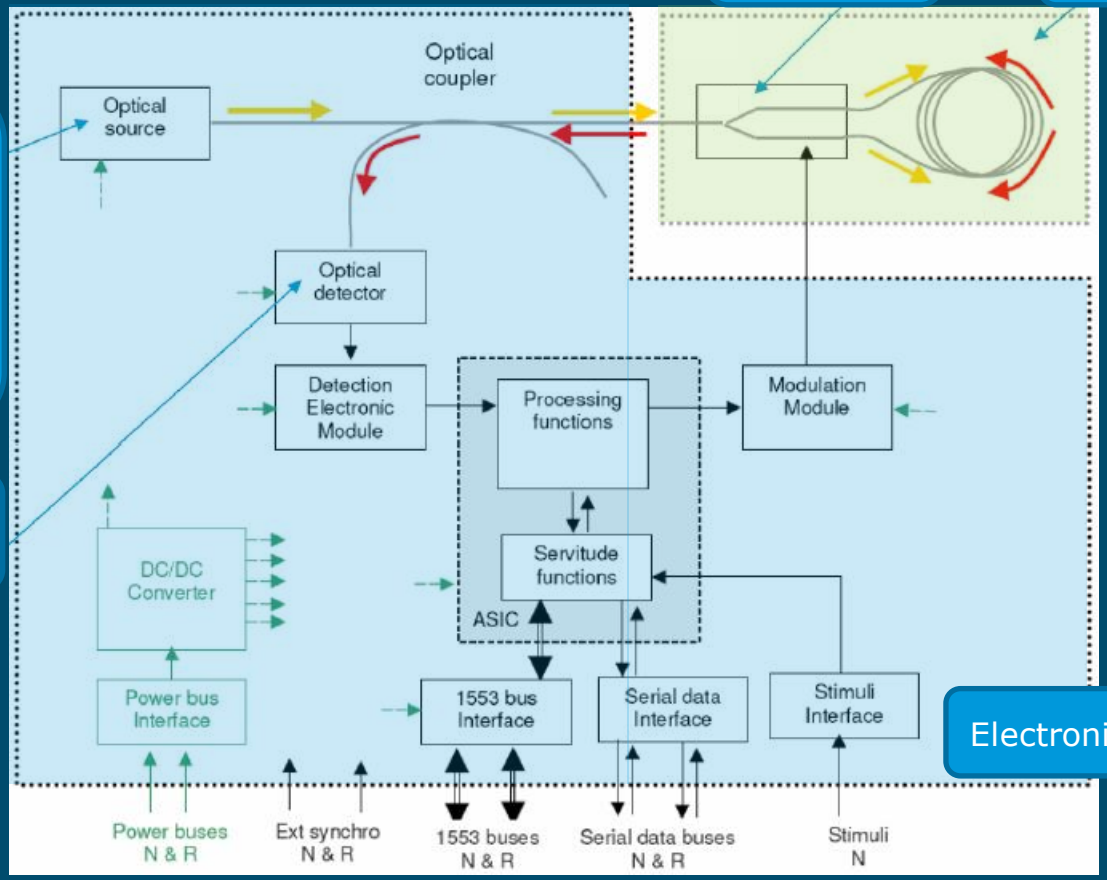

Electronics Module

Astrix Family of FOGs

- FOG – Astrix 200 – multiple missions

5km PM optical fibre
Rotation resolution 0.001 arcsec
15 year operational life
Pléiades, Planck, GAIA, ADM-Aeolus, Sentinel 2, MTG

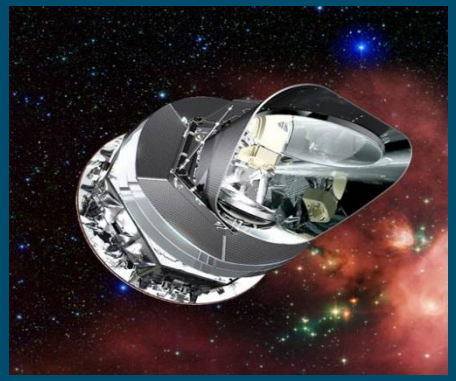

	Earth Observation	Sciences	Telecom	MEO constellation
SF EOL	30 ppm	100 ppm	1000 ppm	3000 ppm
Bias EOL	0.001°/h	0.01°/h	0.1°/h	0.3°/h
ARW EOL	0.0003°/√h	0.005°/√h	0.05°/√h	0.05°/√h
Product	**Astrix 200**	Astrix 120	Astrix 120 HR	Astrix 120 HR
First customers	Pleiades (Cnes), Aeolus (ESA)	Planck (ESA), MMP (Inpe)	Coms (Kari)	Galileo IOV

Future Research at ESA

- Integrated optic gyros and accelerometers based on microphotonics

- PCF interferometic and resonant fiber optic gyro

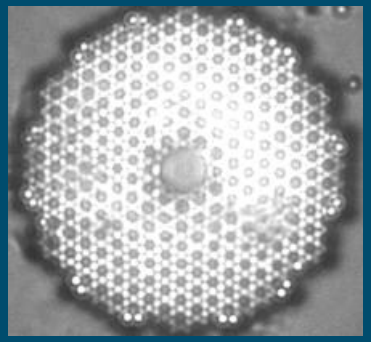

- Cold atom sensors (accelerometer, gyro)

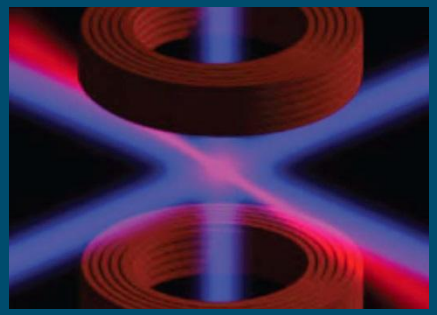

Fibre Optic Sensor at ESA (Cryo – Over 1000 °C)

Large Telecom Satellites

Ground
- TV test
- Mechanical test

In-flight
- Attitude - FOG
- Temperature (payload and service module)
- Propulsion system (chemical/electric)
- Antennas (thermal distortion)

Re-entry Vehicles (Expert, IXV, SHEFEX)

- Thermal mapping (>1000°C)
- Erosion of ablative TPS
- Dynamic pressure
- Strain
- Skin friction

Launchers

- Temperature
- Strain
- Pressure
- Structural monitoring
- Cryo - Propellant management
- Leak detection

Fiber Bragg Grating Sensors (FBG)

- FBG fabrication process

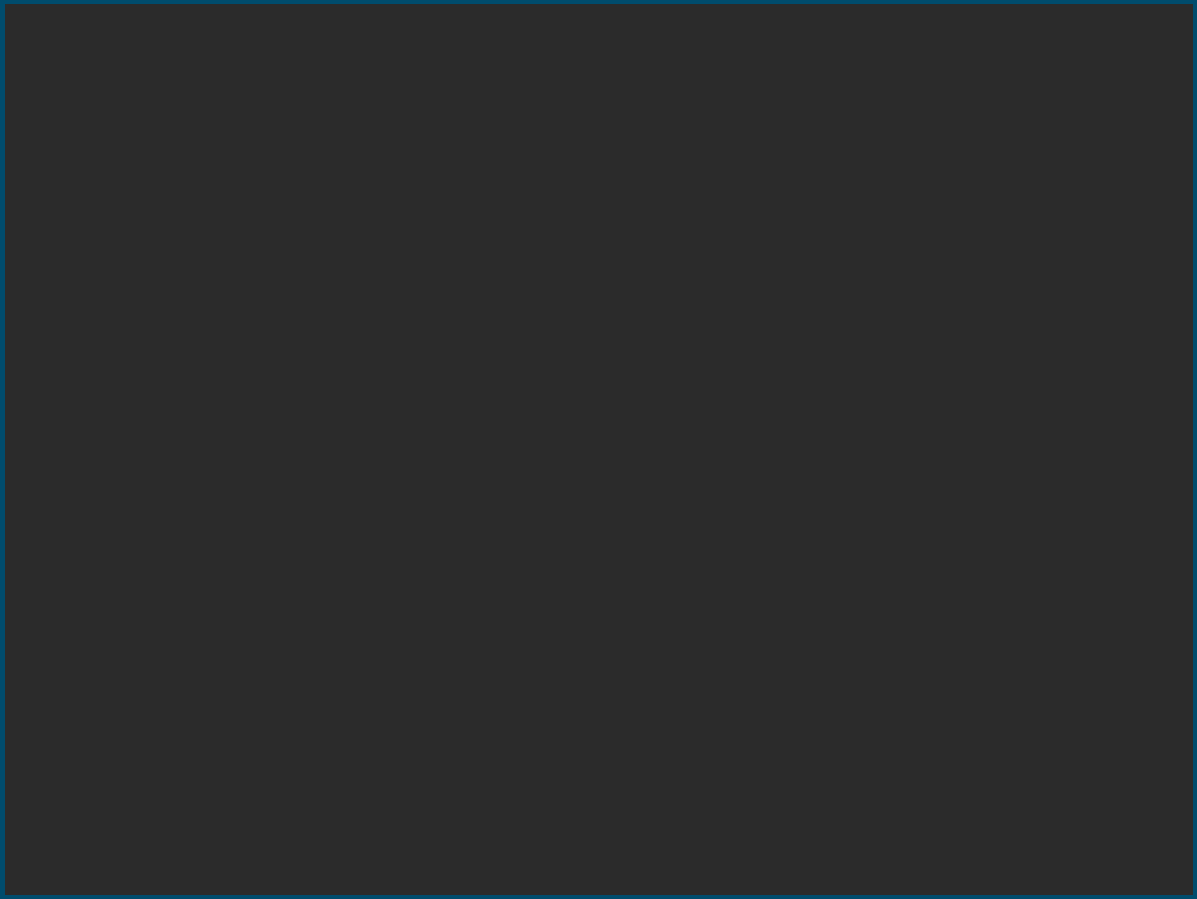

Advantages of FBG Sensors

Fiber Optic Sensors offer:

- High degree of multiplexing – harness reduction
- Multi-parameter measurement capability
- Improved EMI and EMC
- Galvanic and thermal isolation
- Can be easily embedded in composite structures

- Economic advantages of this technology have still to be demonstrated to the space community

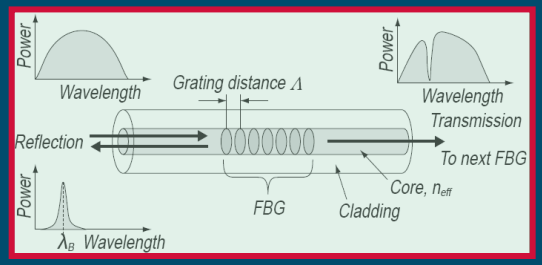

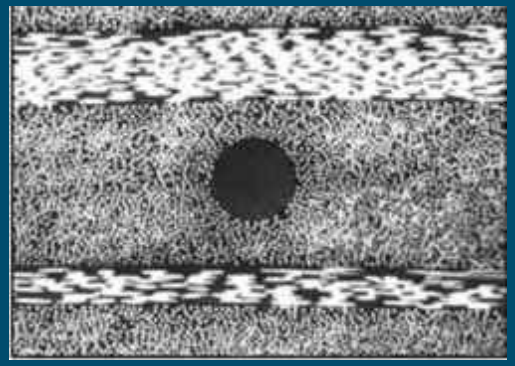

Ground Testing

Thermal vacuum test

- Up to 800 thermocouples and associated harness are required
- Many have to be removed after the completion of the test

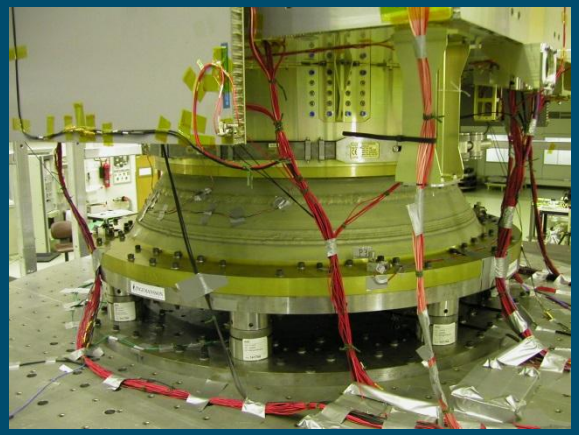

Mechanical Test

- 250 accelerometers (and associated harness)
- Accelerometers are removed after tests
- 3-axis FBG-based accelerometer maturity is still quite low

In-flight Operation (large telecom sat)

An average of 350 thermistors are employed in a EURSTAR 3000 platform, replacing these by FBG sensors

- 50% reduction in harness mass
- Reduction in AIT effort
- Use of FBG sensors could allow the increase of the numbers of sensing points with limited harness overhead
- Detection of remaining fuel in a micro g
- Shape deformation of antennas
- Adaptive structures
- Electric Propulsion - EMI

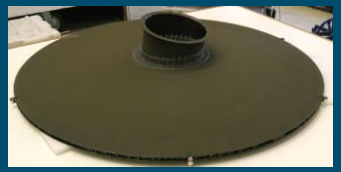

FSD on PROBA 2

FSD – The first in-flight demonstration of a fibre optic sensing system on the propulsion system of the PROBA 2 satellite.

- Lightweight < 1,3 Kg
- Peak Power Consumption <4W
- Central interrogation unit positioned remotely from the sensors
- Distributed temperatures
- Thruster high-temperature
- Propellant pressure
- Optical Power budget sufficient to support 100s sensors

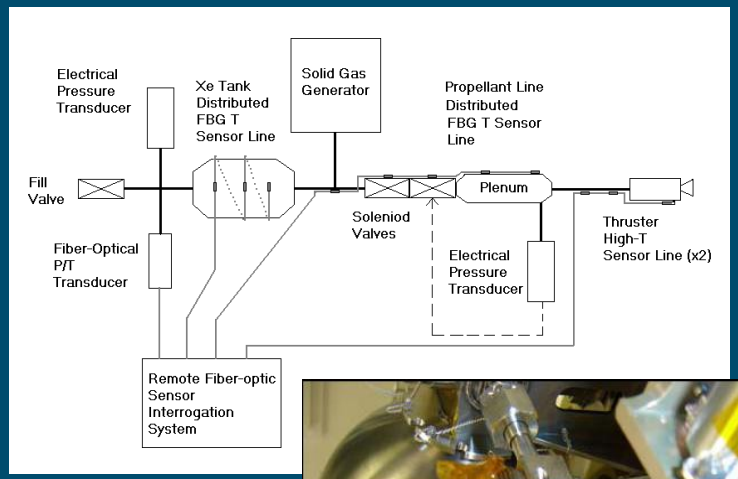

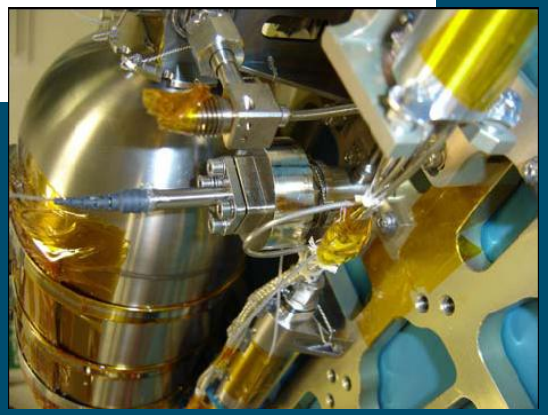

OHB is today developing flight hardware in ESA's ARTES program. IOD is planned on the TET satellite 2016/17.

Future Directions – Distributed Sensing

Different scattering mechanisms that are present in optical fibres

- Rayleigh (strain & temperature) cross sensitivity is a problem
- Brillouin (strain & temperature)
- Raman (temperature - DTS)

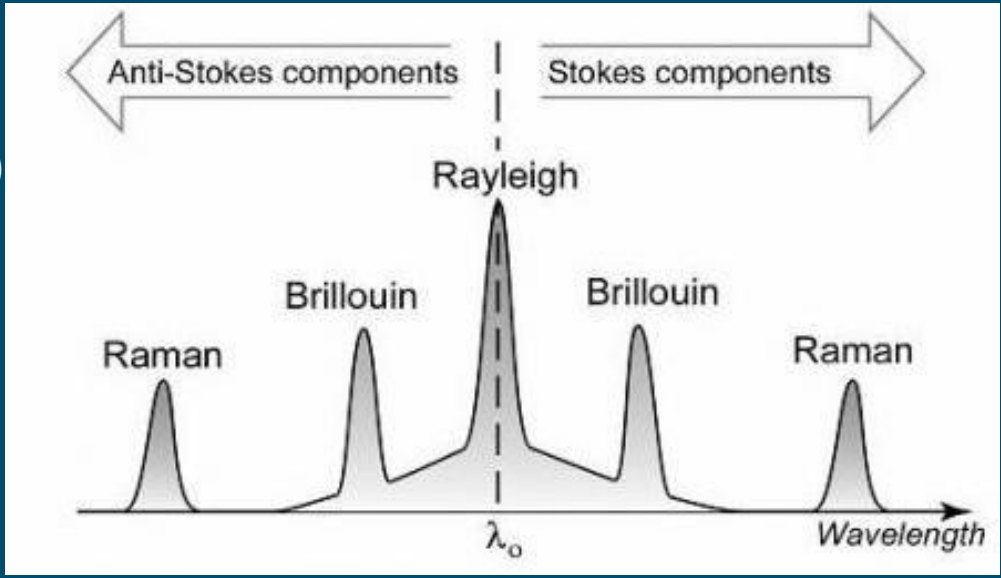

The spatial-resolution and sensing length needs to be optimised for tank, antenna or structural panel monitoring

SpaceFibre – Optical Digital Communication Module

Objectives

- To design and manufacture a batch of SpaceFibre (optical) transceivers, and pass these through a space relevant environmental test plan.
- Two manufacturers VTT and D-lightsys would each produce 21 modules

Module Technical Specifiations

- 6.35Gbps data rate
- 12dB optical power margin over complete thermal range
- BER <10-12
- Operational Temp -40oC to +85oC
- Storage Temp -55oC to +125oC
- Dimensions < 17x17x5mm
- Power Consumption < 400mW
- Typical space environment requirements, vibration, thermal, outgassing, hermeticity

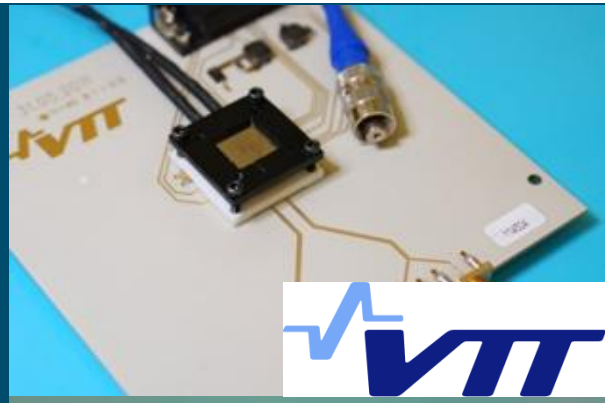

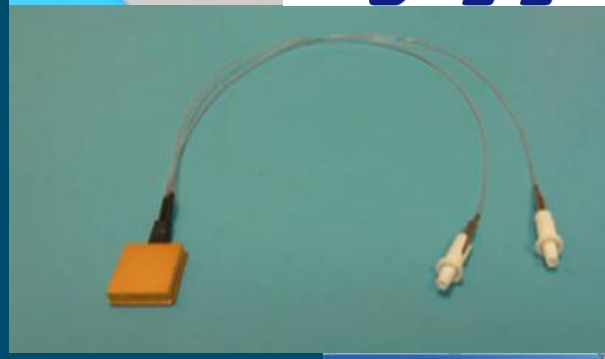

Optical Digital Communications

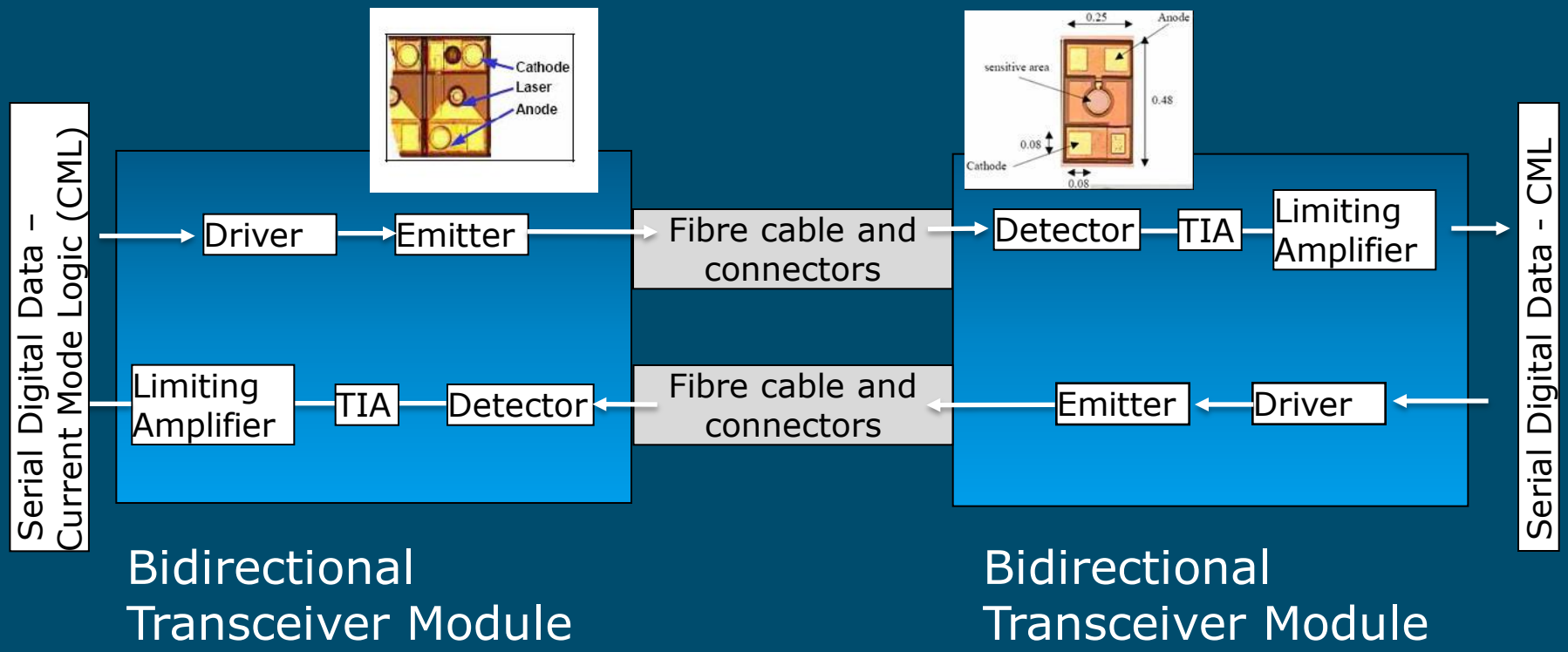

Bidirectional Transceiver Module

Bidirectional Transceiver Module

VTT Space Fiber Transceiver

6.25 Gbps 850-nm Transceiver for Harsh Environment

- Up to 6.25 Gbps full-duplex data link for short range applications
- Protocol independent; but compatible with *SpaceFibre* physical layer
- Power consumption 210 mW (typical)
- 50/125 µm multimode fiber pigtails

VTT's 6.25 Gbps *SpaceFibre* Transceiver Structure

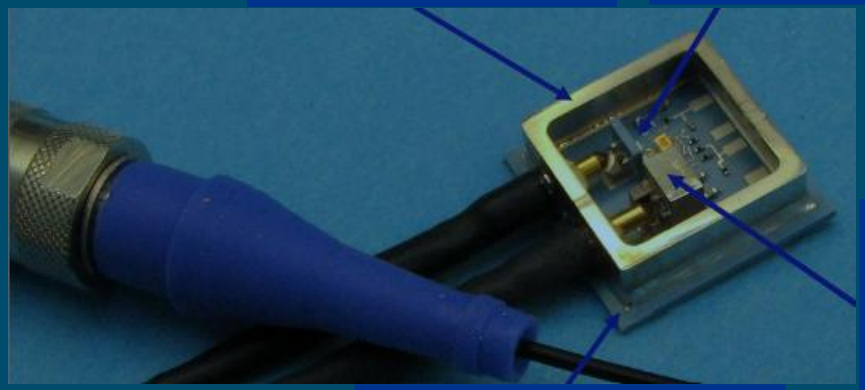

Kovar frame and lid soldered to LTCC carrier

- Glass-metal fiber feed-through using solder glass preform
- Sealed packages passed the helium leak tests after been stressed
- with temperature cycling -55…+125 °C up to 1000 cycles

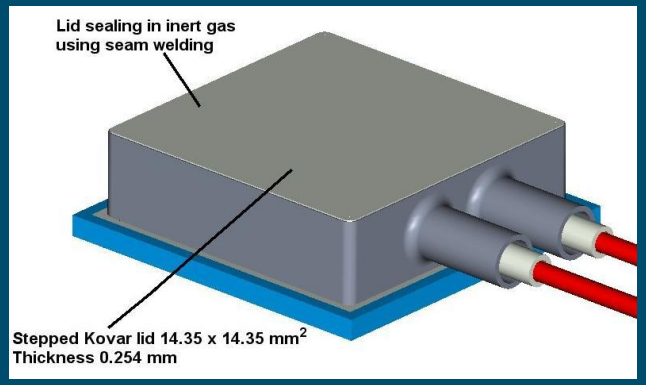

Environmental Testing

Radiations

- Passed specified **total dose** tests:
- Gamma radiation up to 100 krad
- Proton fluence 10^{12} p/cm2 (@ 60 MeV)
- Laser drivers used in the EM model showed tendency to latch-up effects at high dose of heavy ions (LET >35 MeV/mg/cm2

Mechanical testing

- Vibrations: passed 50 grms
- Shock: passed 3,000 g

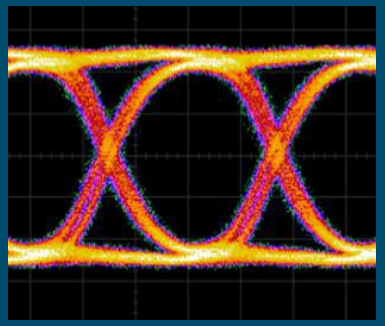

Thermal vacuum: passed

- Clear eye opening >6.25 Gbps and BER <10-12 through specified operating temp range -40…+85 °C (and wider)

SpaceWire Network Compatibly Test

1. 2.5Gbps demonstrated over 100m optical fiber

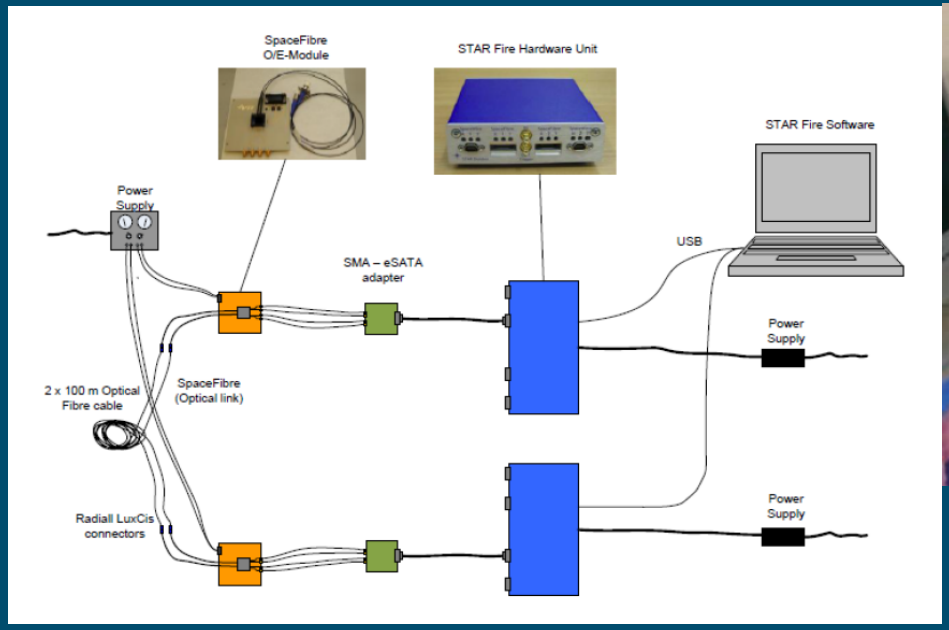

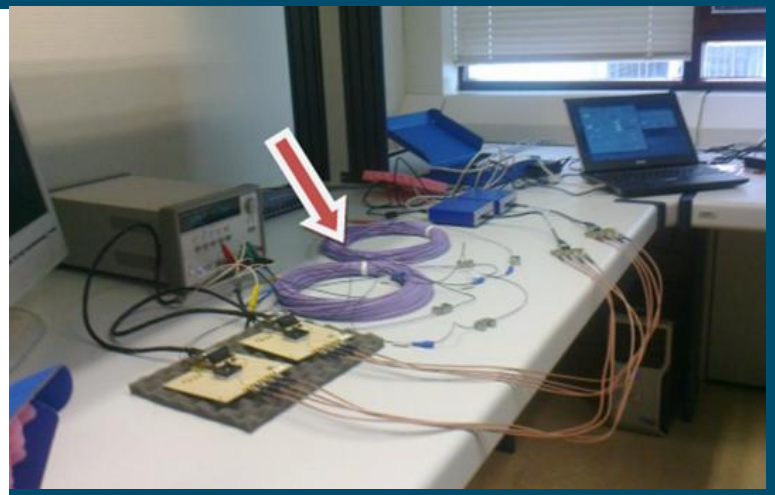

Photonic Digital Communications for TM/TC

TESAT is the first P/L manufacturer to consider fiber optic links for TM/TC of the TWTAs on a OHB Small GEO platform for HISPASAT's Advanced Generation HAG-1 Telecommunication satellite.

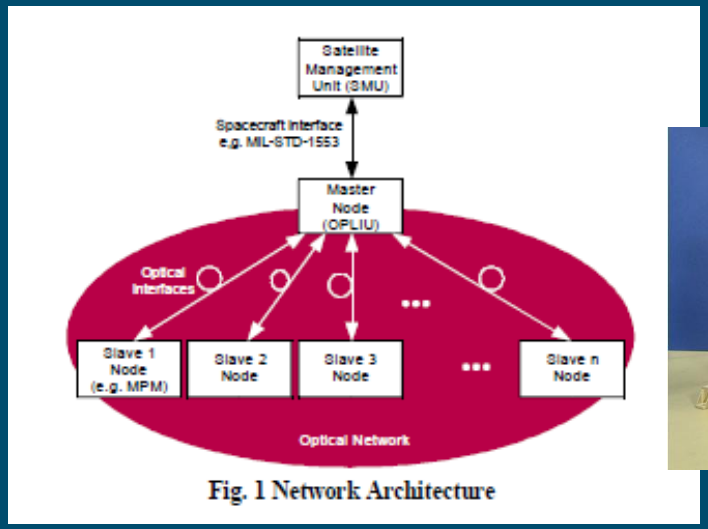

Fig. 1 Network Architecture

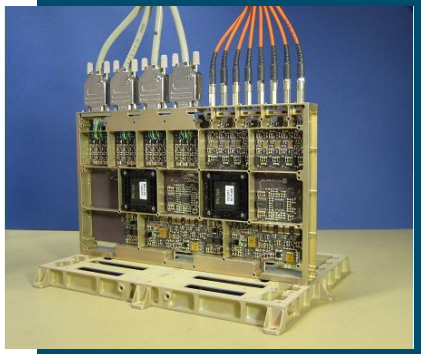

Optical Transceiver

- Ezconn (CZ) – FTTH market
- Bidirectional module
- Qualified for space by TESAT

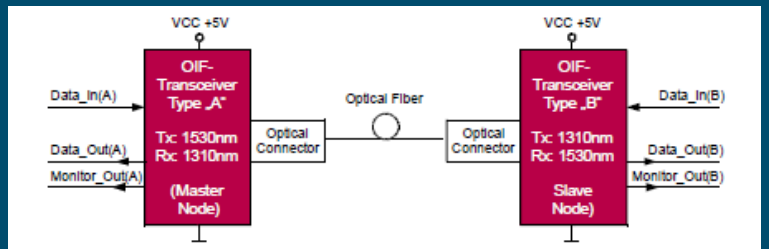

Fig. 9 Bi-directional Optical Link

OPTICAL FIBER BASED TM/TC ARCHITECTURE FOR FUTURE COMMUNICATION PAYLOADS: A FIRST STEP WITH THE SMALL GEO, Späth M. et al., ICSO 2010 Proceedings

IOD of Optical Digital Communication Systems

2009: SMOS – Optical Comms Data and Clock Distribution

2013: AlphaSAT - TDP 8

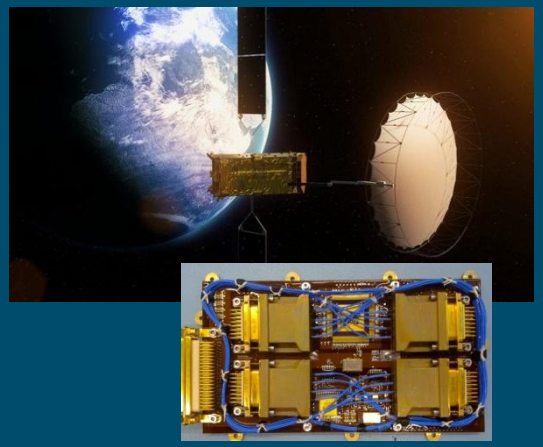

ESA's Growing Flight Heritage

2013: PROBA V- HERMOD

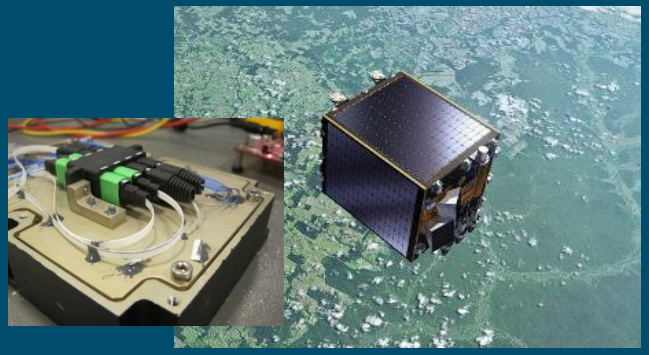

1998: ISS - Optical Communications

SMOS – Soil Moisture Ocean Sallinity

SMOS first European Satellite Payload to rely critically on fiber optics, launched in November 2009

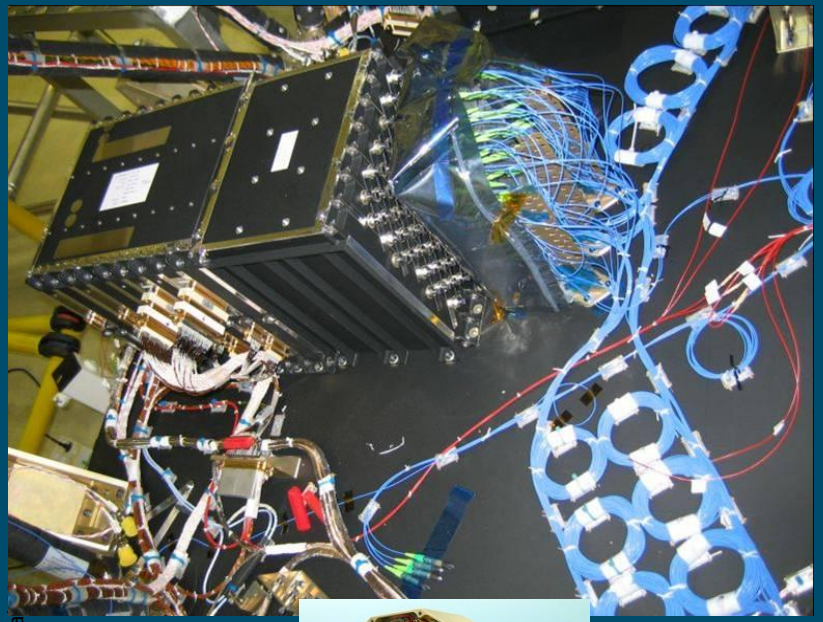

- More than 800m optical fibre cable
- 200 optical fibre links
- Distribution of Clock – 56MHz
- Return Data – 112 Mbps
- Design Selected:
  - Improved EMI - improved signal integrity
  - Harness flexibility
- COTS components used:
  - Modulight AlGaInAs 1300nm FP laser diodes,
  - Hamamatsu InGaAs PIN photodiodes,
  - Gooch and Housego Fiber Splitters
  - Gore FO Cable
  - Diamond AVIM connectors

SIOS optical link demonstration - AlphaSAT

- SIOS optical link demonstration is part of Alphasat radiation Environment and Effects Facility (AEEF)
- 4 low data rate (1Mbps) fiber optic links
- 4 medium data rate (100Mbps) fiber optic links
- Measurement of optical power and BER
- Successful AlphaSAT qualification campaign
- Launched in 2013
- Successful IOT performed on transceivers
- 3-5 year expected mission life

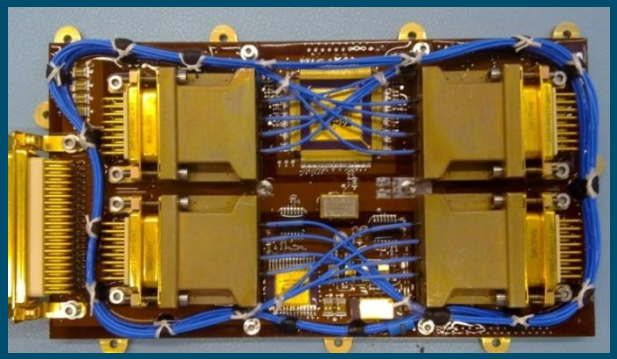

DIGITAL AND ANALOGUE OPTOELECTRONIC LINKS FOR INTRA SATELLITE COMMUNICATIONS, J. Blasco, ICSO 2010 Conference Proceedings.

HERMOD payload: Proba-V flight demonstrator

- **Activity information:**
  - Contractor: T&G (Norway) and Das Photonics (Spain)
  - Duration: 6 months for the delivery and integration of the payload and 2 years for the flight data analysing
  - Programme: GSTP, ESA TO: Stephan Hernandez

HERMOD objective:

- validate different T&G MPO optical links with a digital transmission system
- Follow evolution of the bit error rates of the 4 optical links during life time of the flight and in function of the flight environment.

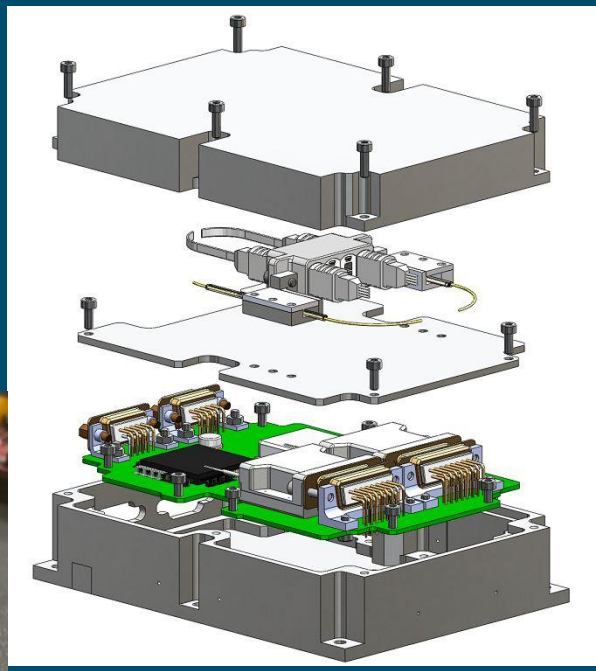

- **Activity status:**
  - Successfully launched in April 2013 from Vega
  - Daily reception of the data
  - Results have been presented during ICSO 2014

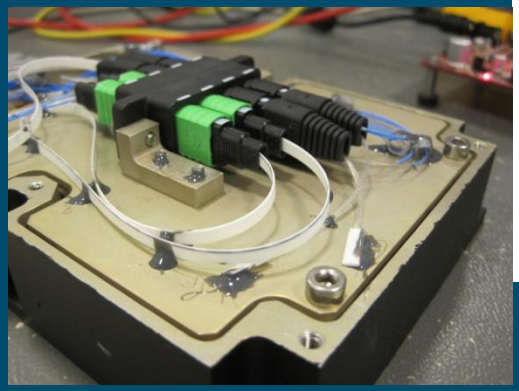

Technology Platform for Optical Digital Communication for Satellites

One technology platform covering 10Mbps – 10Gbps

- Sources: VCSELs (850nm)
- Detectors: Si Pin (850nm)
- Modulation: Direct modulation
- Fibers: Graded Index Multi Mode
- Fiber Cables: Single (<10 Gbps) and Ribbon (>10 Gbps) Fiber
- Cable jackets: (no outgassing) e.g W.L. GORE
- Connectors: Anti Vibration MTP and Single Fiber
- Parallel Optics are preferred over WDM for reliability reasons

Satellite Applications

- TM/TC Digital Communications (low data rate)
- Equipment to Equipment digital communications (high data rate)
- Next Generation Telecom Processor (parallel optics)

Optopyro for Launchers and Satellites

- Application on launchers:
  - Engine ignition
  - Separation of stages and payload
  - Propulsion system management (valve actuation)
  - Passivation of tanks
  - Flight termination in case of emergency
  - Several tens of pyro functions per launcher
- Application on satellites
  - Release mechanisms (solar panels, antennas, instrument covers)
  - Propulsion system valves
  - Passivation at end of life
  - Euro3000: approx 40 pyro functions
  - Trend in satellites to go towards non-explosive resettable actuators.

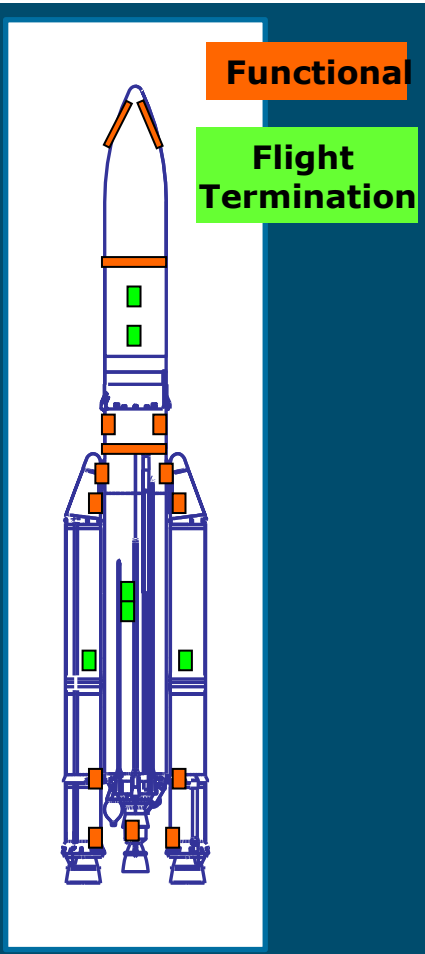

Advantages of Optopyro for Launchers

- No primary explosives
- Expected cost reduction :
  - Reduction in component number (pyro lines, relays, delays all removed, centralised OSB)
  - A.I.T. simplification
- Improved safety & dependability
  - Improved EMC of harness
  - Improved test coverage ratio
  - Possible BIT
- Reduction in mass
- Lower primary power consumption

- Disadvantage replacing a reliable technology, and additional eye safety constraints to be managed (10W laser source)

Optopyro Schematic

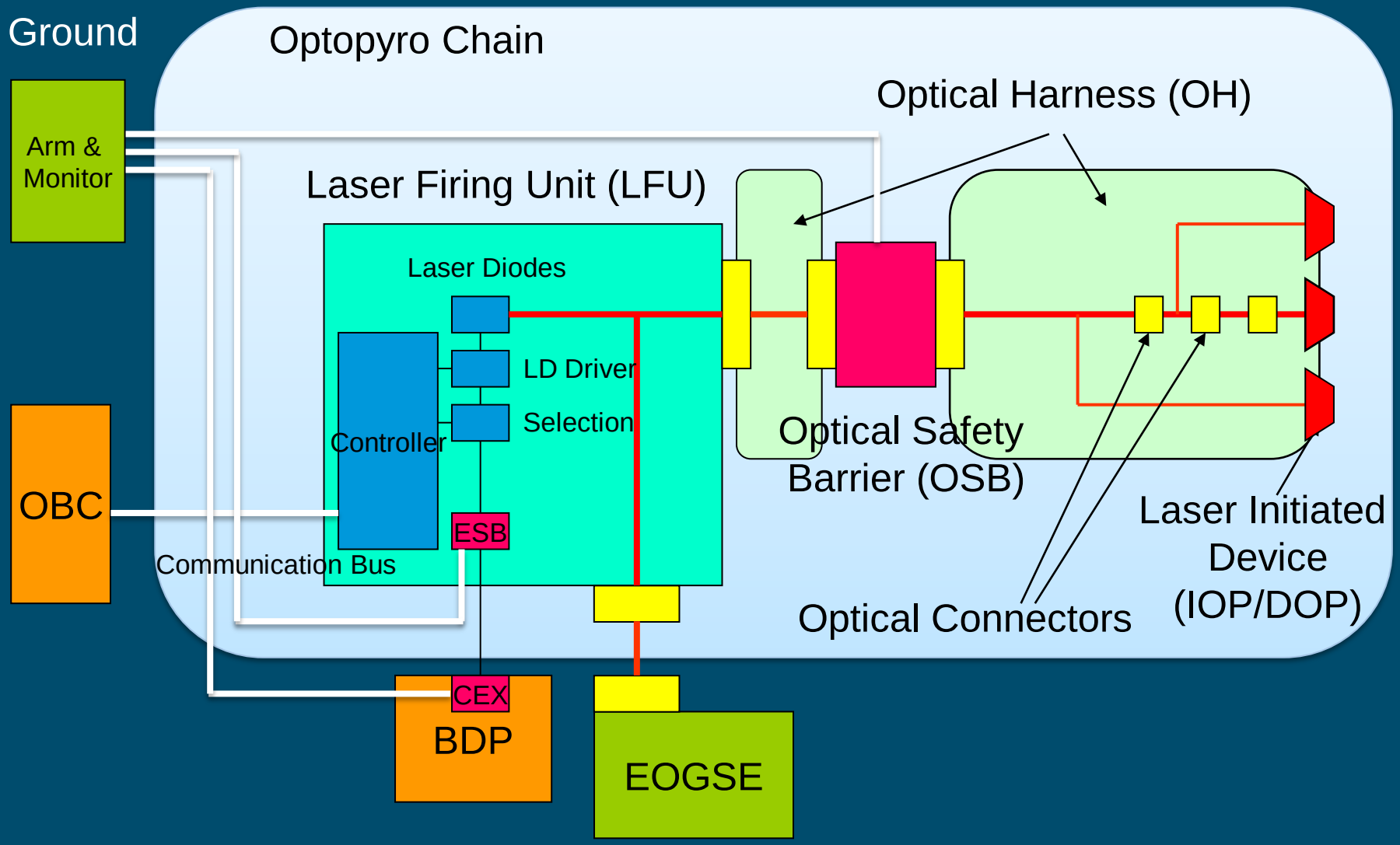

Main Optopyro Components

- Mil 38999 -FO Connector (TRL 4-5)
  - Deutsch
  - Souriau (Elio Family)
  - Current applications (Aviation, F1)
- IOP/DOP (TRL 8)
  - Lacroix
  - Nexter
  - Demonstrated on Demeter Satellite
- FO Cable 105 micron core (TRL 5)
  - Gore
  - Nexans
  - Carlisle
- 980nm Laser Diode approx. 10W (TRL 5)
  - Bookham
  - Eagleyard
- Optical Safety Barrier (TRL 5)
  - KDA

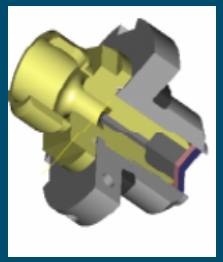

Opto-pyrotechnics - Satellites

- Taking a Eurostar 3000 platform as a reference a recent study has shown the potential:
  - 10-15 kg reduction in mass
  - Reduction in cost assuming the use of COTS components for the harness.
  - Reduction in primary power requirements
  - Simplification of the AIT practice could be identified (OTDR)

- IOD performed on the CNES "DEMETER" satellite in 2004

The Plug and Play Satellite

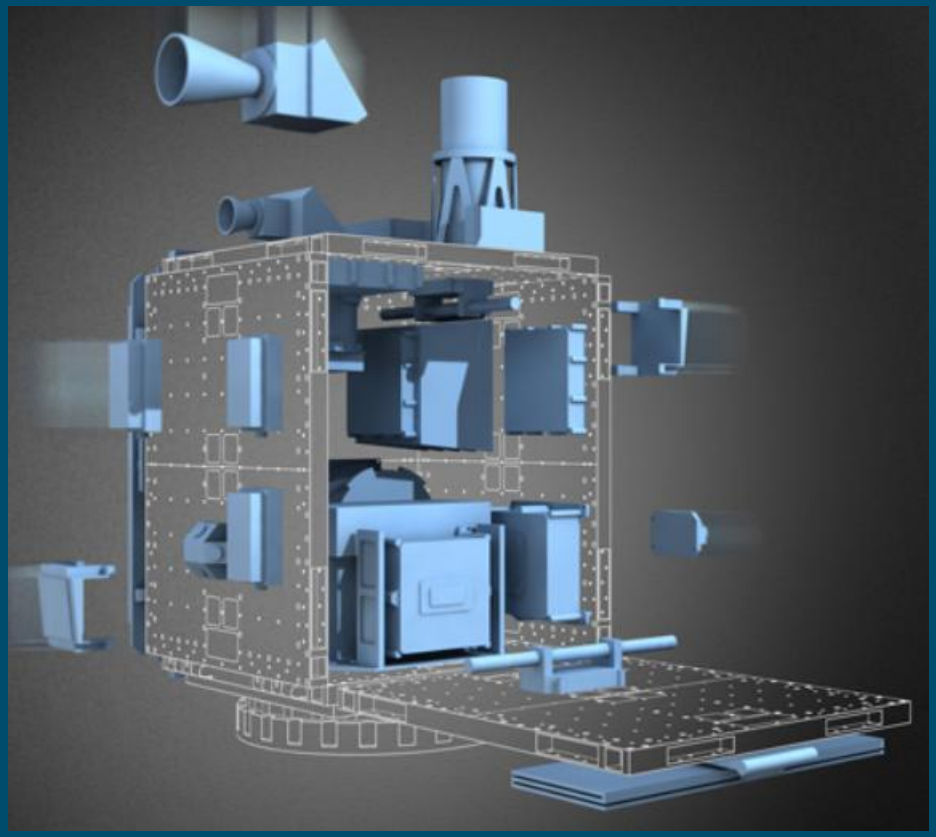

Illustration: John MacNeill

Home computers are a great example of a plug and play system.
Why not a plug and play satellite?
Common interface standards And protocols are required.

USAF plug and play satellite built in under 4 hours

Photonically Wired Panels

Embedding of optical fibres in the panel walls to provide a lightweight communication and sensor harness inside the walls of the satellite.

Expected advantages:

- Reduction in mass
- Reduced AIT effort due to reduced cable management during integration
- Improved EMI and EMC performance
- Full thermal mapping of panel using embedded sensors
- From cradle to grave sensor implementation

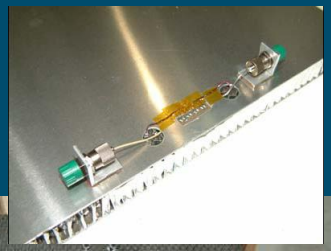

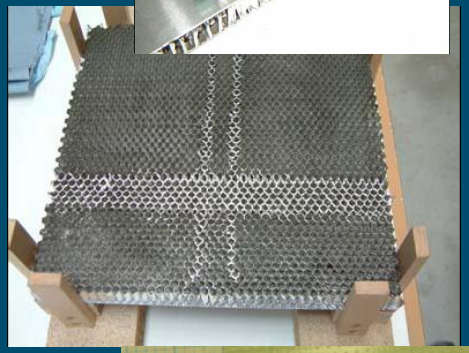

TRL low 2:

- First demonstration by Kyser Threde in FOSAT project - 2010
- ARTES 5.1 activity with OHB to investigate the technical and economic benefits

Conclusions

1998: ISS - Optical Communications

2009: SMOS – Optical Comms Data and Clock Distribution

2013: AlphaSAT - TDP 8

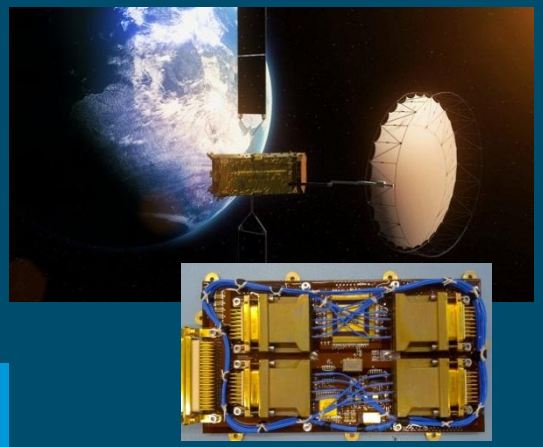

Growing Flight Heritage

2004: Demeter – Optopyrotechnic demonstrator

2009: Since Planck – FOG

2009: PROBA 2 – Fibre Optic Sensor Network

2013: PROBA V- HERMOD

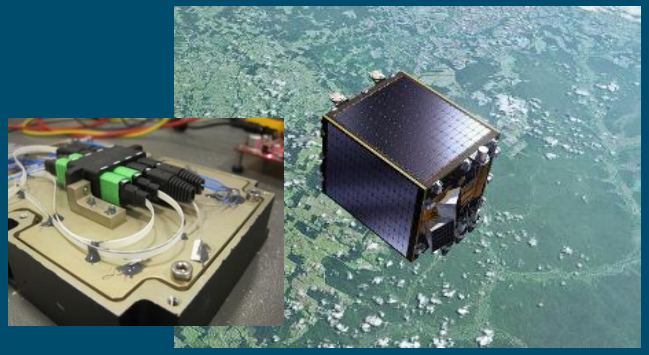

Acknowledgments

The work presented in this presentations was performed by the industrial and academic contractors of ESA under full or partial funding by ESA.

For information on Photonics for space please consult the following free web-resources:

http://www.icsoproceedings.org
http://photonics.gsfc.nasa.gov/
www.escies.org (technologies photonics)

Iain.Mckenzie@esa.int

Aurora Borealis and night lights from ISS

https://www.youtube.com/watch?feature=player_detailpage&v=a7s8vnuknPY