The Abdus Salam
International Centre for Theoretical Physics

United Nations
Educational, Scientific and
Cultural Organization

IAEA
International Atomic Energy Agency

2025-49

Satellite Navigation Science and Technology for Africa

23 March - 9 April, 2009

Autonomous GNSS

MILLER Casey C.
Wright Patterson Air Force Base Sensors Directorate
2241 Avionics Circle, WPAFB
Wright Patterson OH 45433

MILLER Mikel
Air Force Research Laboratory
101 West Eglin Blvd,. Ste. 268
Eglin AFB FL 32542-6810

MORTON Jade
Miami University Dept. of Electrical and Engineering
260 P. Engineering Building
Oxford OH 45056

Workshop on "Satellite Navigation Science and Technology for Africa"

Autonomous Ground Vehicle Guidance, Navigation and Control Using GNSS and Other Navigation Sensor Measurements

30 March 2009

Dr. Mikel Miller
Dr. Jade Morton
1Lt Casey Miller

Dr. Mikel M. Miller, Ph.D.

- **Introductions**
- **Overview**
- **Autonomous GNC**
- **Lego® Mindstorms Intro**
- **Lego® Mindstorms Challenge**

- Education:
  - Ph.D. EE (98) & MSEE (87) – AF Institute of Technology (AFIT); Dayton, OH
  - BSEEE (82) – North Dakota State Univ; Fargo, ND
- Experience:
- Current Position: Technical Director, AFRL/RWG, EAFB, FL
- Over 24 years of Pos, Nav, & Time (PNT) Experience
- Published over 40 Technical Papers related to PNT
- USAF Retired after 20 yrs
- Teaching Experience:
  - 5 yrs as AFIT Assistant Prof
  - Over 20 short courses
  - Miami Univ & AFIT Adjunct Faculty
- Professional Societies:
  - Institute of Nav (ION):
    - Fellow
    - Current President
    - Royal Institute of Nav
    - Associate Fellow
    - IEEE, AIAA, TBP, EKU

- **Family:**
- **Married 26 Years to Colleen**
- **5 Children: Casey, Krista, Trevor, Megan, & Lauren**

June 2007

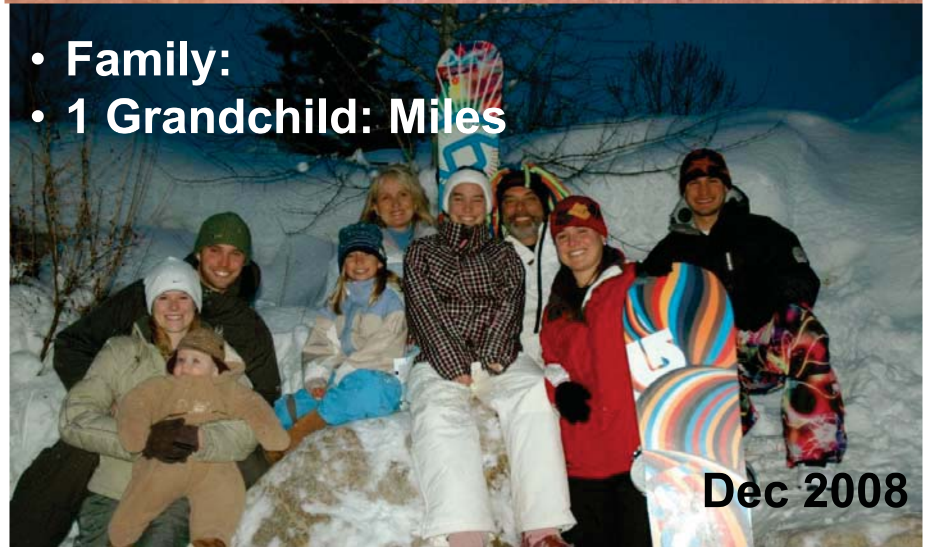

- **Family:**
- **1 Grandchild: Miles**

Dec 2008

Dr. Yu (Jade) Morton, PhD.

- **Introductions**
- Overview
- Autonomous GNC
- Lego® Mindstorms Intro
- Lego® Mindstorms Challenge

- Education:
  - Ph.D. EE (91) – The Pennsylvania State University, University Park, PA
  - MS Systems Analysis (00) – Miami University, Oxford, OH
  - MS EE (87) – Case Western Reserve University, Cleveland, OH
  - BS Physics (83) – Nanjing University, Nanjing, China
- Professional Experience:
  - Professor, EE, Miami Univ., Oxford, OH. Began tenure track at Miami in 2000
  - Post-doctoral Research Fellow, University of Michigan, Ann Arbor, MI, 1992-3
  - Published over 70 technical papers related to PNT and ionosphere physics
- Teaching Experience:
  - 1st EE Professor at Miami (1st woman full professor in Engineering School at Miami)
  - Developed a Navigation theme in undergraduate curriculum at Miami
- Professional Societies:
  - Institute of Navigation (ION)
  - IEEE: Aerospace and Electronics, Microwave theory & Technology, Signal Processing

Married 20 yrs to Dr. John Morton

02/09

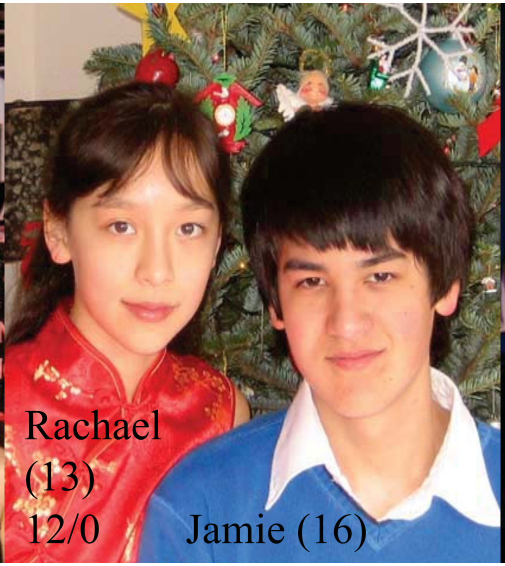

Rachael (13)

12/0

Jamie (16)
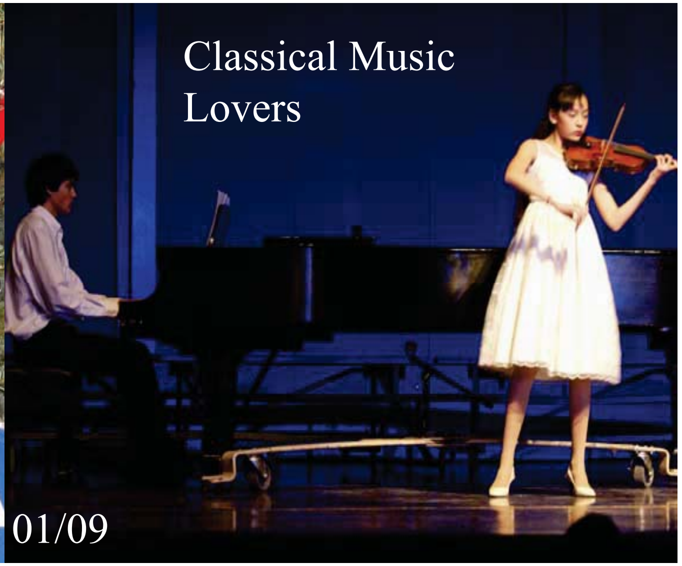
Classical Music Lovers

01/09

Casey C. Miller

- Education:
  - BSCE (06) – Miami University, OH
- Experience:
  - Current Position: Executive Officer, Sensors Directorate
  - 9 years of Nav Experience
  - Presented 4 Technical Papers related to PNT
- Professional Societies:
  - Institute of Nav (ION):
    - Section Vice President
    - Mini-Urban Challenge Co-Chair
    - Auto-mow Committee Member

Overview

9:30 – 10:15 – Overview (Mikel):

- Instructors Introductions
- Introduce Autonomous Guidance, Navigation, and Control Concept
    - Precision Farming Overview
    - ION's Robotic Lawn Mower Competition
    - Autonomous vehicle operation (DARPA Grand Challenge)
    - Mini-Urban Challenge
- Importance of Outreach – Next engineering generation

10:15 – 10:30 – Break

10:30 – 1:00 – GNC issues for autonomous vehicles (Mikel - 30 minutes)

- Basic Control
    - Sensors description
    - Outer Loop
    - Inner Loop
- ION Robotic Lawn Mower – Basic Approaches (Jade - 1 hour)
    - Miami University's Approach
- DARPA Urban Challenge (Casey - 1 hour)
    - DARPA Vehicles:
    - Carnegie Mellon '05 & '07
    - Stanford '05 & '07
- MUC – ION presentation

1:00 – 2:00 – Lunch

Overview

2:00 – 3:15: Lego® Mindstorms Kit (Jade)
- **Basic Kit introduction**
- **Software:**
  Lego® Provided
  Java (down load)

3:15 – 3:30 – Break

3:30 – 5:30: Lego® Mindstorms Challenge – hands-on – (All)
- **Challenge 1: Basic Line following**
- **Challenge 2: Use sonar for obstacle detection and avoidance**

Autonomous Vehicle GNC Concept

- **An autonomous ground vehicle is a vehicle that navigates and drives entirely on its own with no human driver and no remote control.**
- **Uses a variety of sensors to carry out the task it has been assigned.**

- Introductions
- Overview
- **Autonomous GNC**
- Lego® Mindstorms Intro
- Lego® Mindstorms Challenge

Autonomous Vehicle GNC Concept

- What is the mission of the autonomous vehicle?
  - Farming, transportation, surveillance, etc..
- How does the vehicle accomplish the mission?

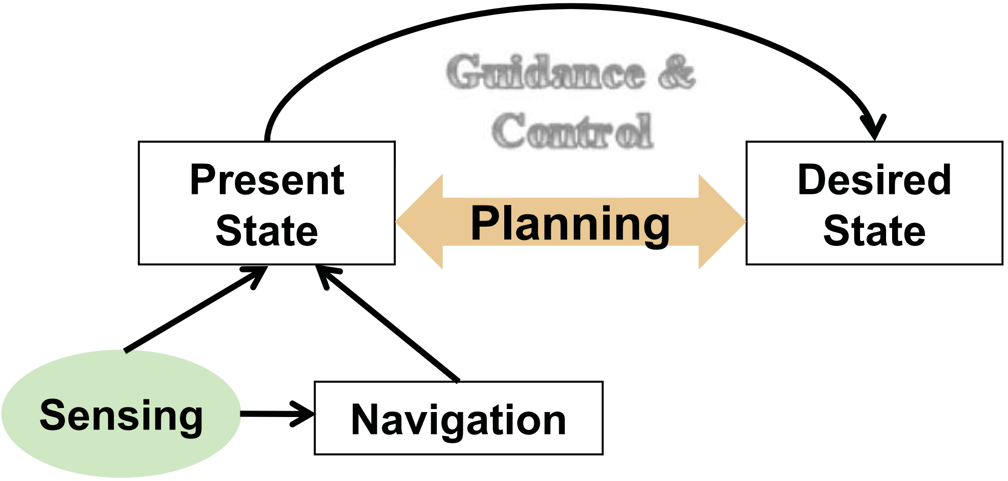

- What is the Present State?
  - Sensing
- What is the Desired State?
  - Planning
- How does the vehicle get from the present state to the desired state?
  - Guidance, Navigation, & Control

Autonomous Vehicle GNC Concept

Intelligent Vehicle Systems JOHN DEERE

Courtesy of
Bob Norris, John Deere

Precision Farming

Doing the right thing at the right place at the right time in the right way… and without the human interaction

Precision Farming: Concept

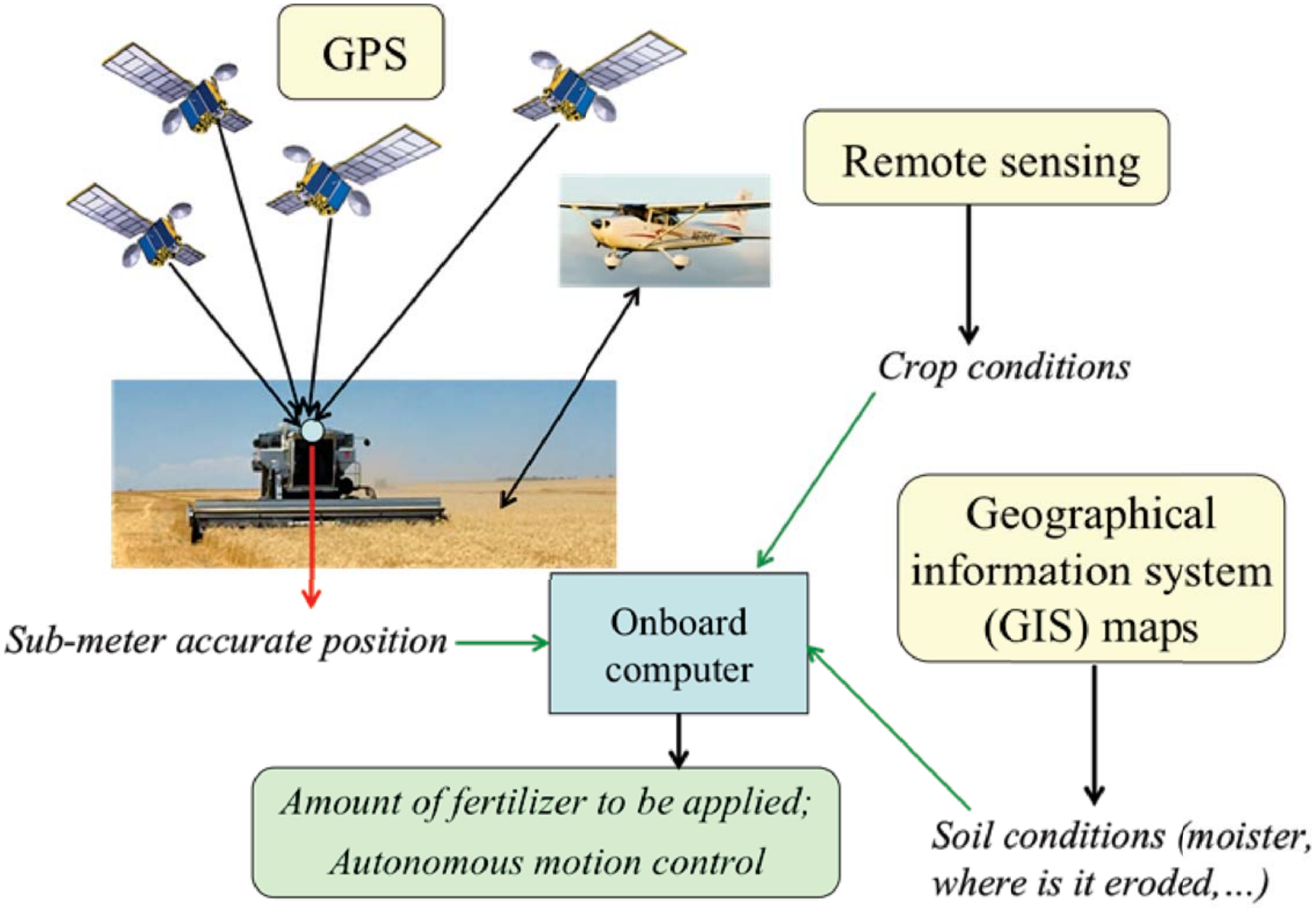

Use of GPS: Example

- Cm-accurate position solution from GPS is used to automatically steer the vehicle
- GPS technology: Real-Time Kinematic (RTK) solution; involves differential GPS and carrier phase positioning concepts

Image is from www.novariant.com – provider of the GPS RTK AutoSteer

Precision Farming Cycle

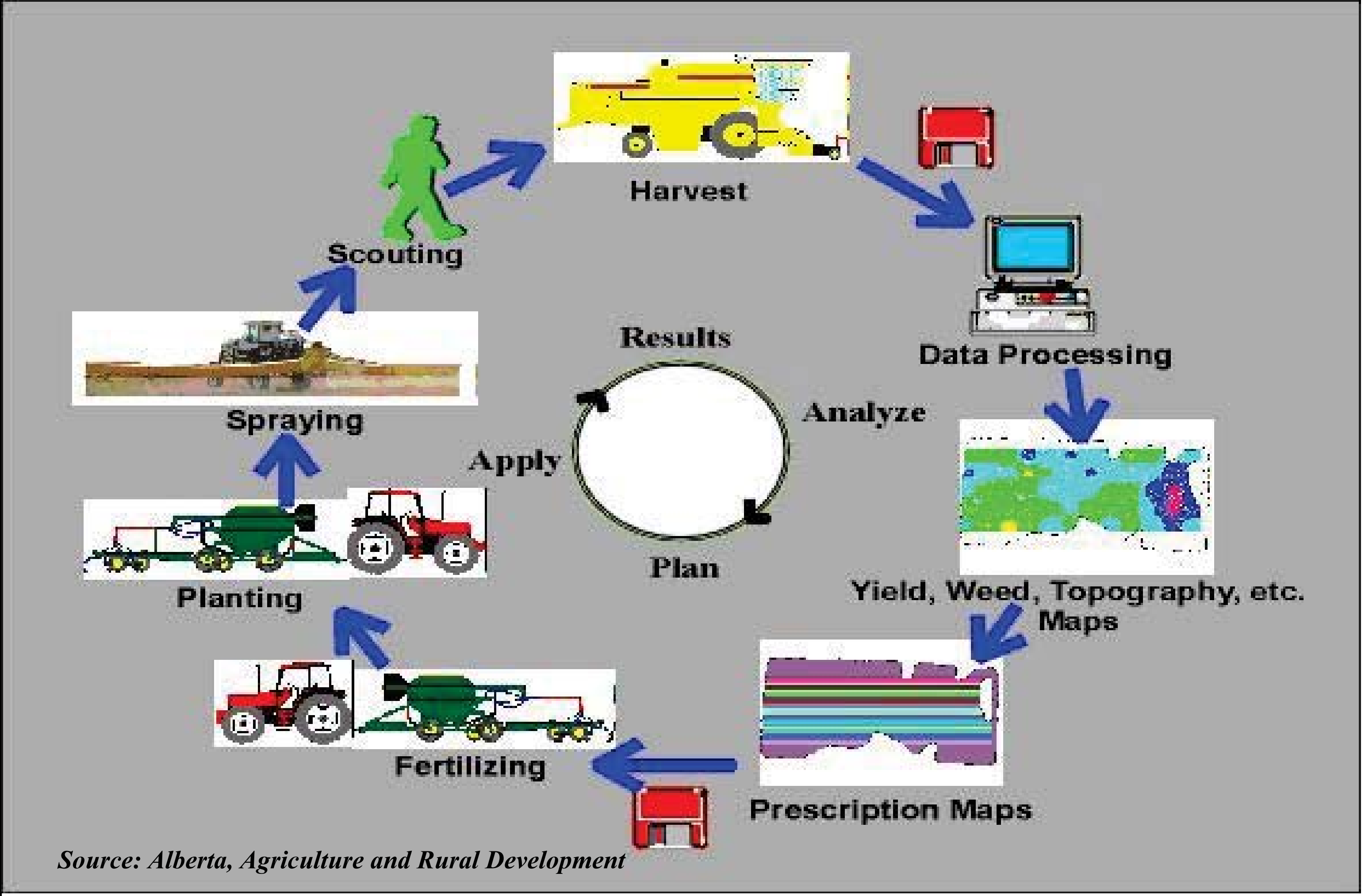

Source: Alberta, Agriculture and Rural Development

- Yield monitoring
- Yield mapping
- Variable rate fertilizer
- Weed mapping
- Variable spraying
- Topography and boundaries
- Salinity mapping
- Guidance systems
- Records and analyses

ION Robotic Lawn Mower Competition

- The purpose of this competition is to design and operate a robotic unmanned lawn mower using the art and science of navigation to rapidly and accurately mow a field of grass.
- In the competition the lawn mowers maneuver through a mock lawn:
  - Cutting grass
  - Avoiding static obstacles like a flower bed
  - Avoiding moving obstacles like a pet dog
  - Traveling along a fence line

ION Robotic Lawn Mower Competition

- Introductions
- Overview
  - Precision Farming
  - ION Robotic Mower
  - DARPA Challenge
  - ION Mini Urban Challenge
  - Outreach
- Autonomous GNC
- Lego® Mindstorms Intro
- Lego® Mindstorms Challenge

- Introductions
- **Overview**
  - Precision Farming
  - **ION Robotic Mower**
  - DARPA Challenge
  - ION Mini Urban Challenge
  - Outreach
- Autonomous GNC
- Lego® Mindstorms Intro
- Lego® Mindstorms Challenge

Hardware architecture

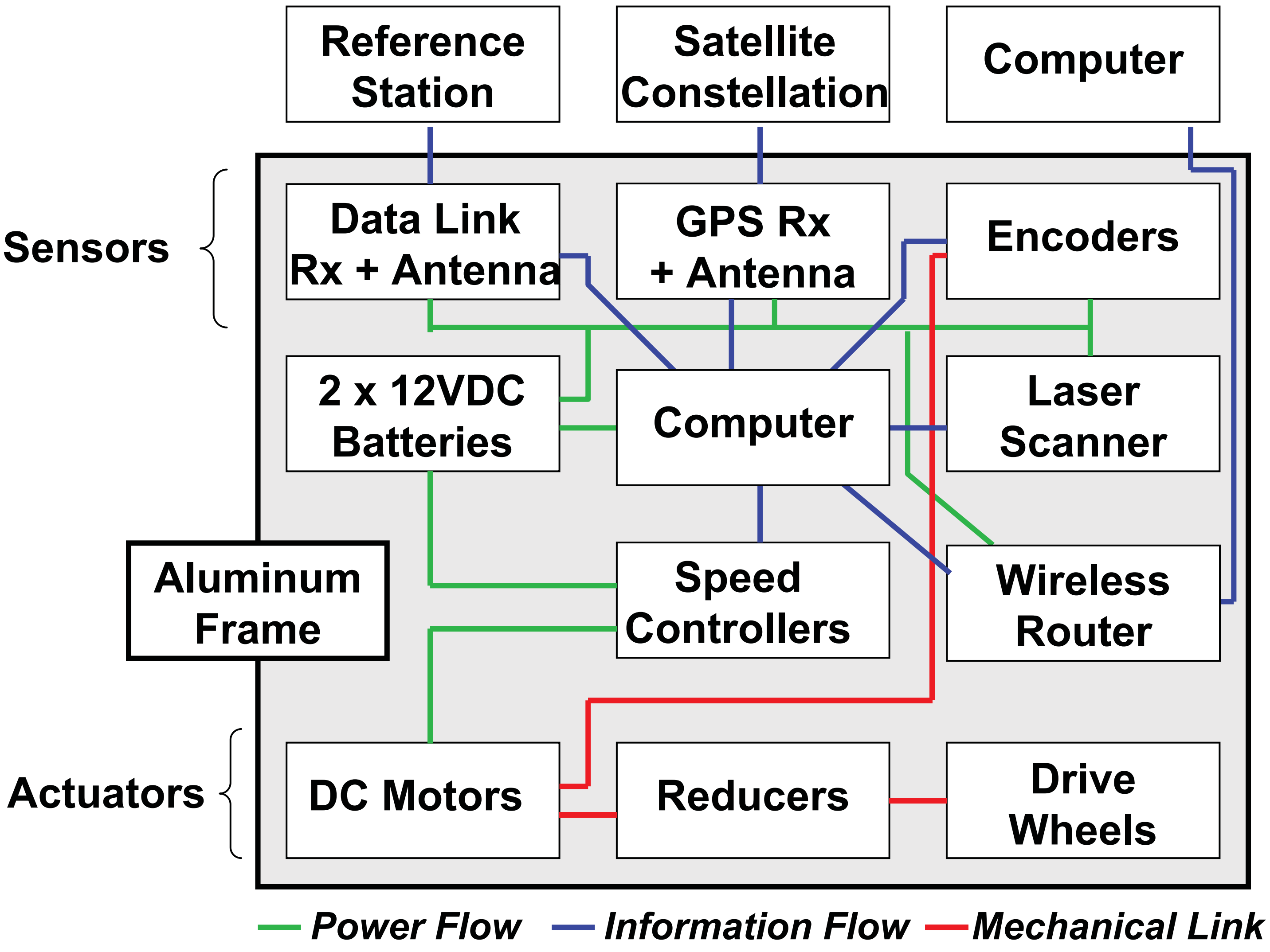

Hardware architecture

SICK – LMS200

65E40 (DartControls)

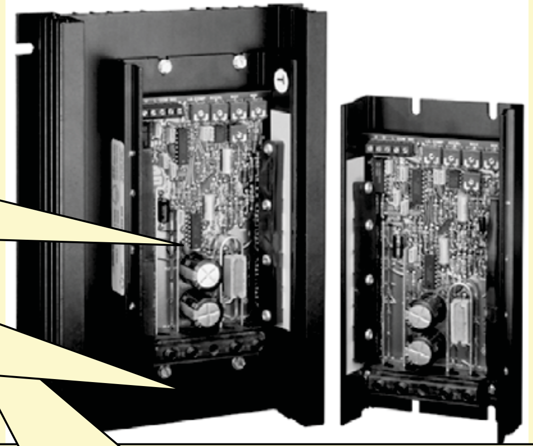

Sate
Conste

Ant

C
ries

Com

NPC-B2812

DGR-15W (FreeWave)

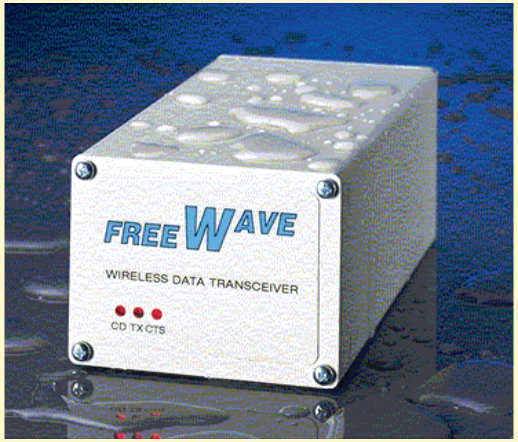

C)

PCI

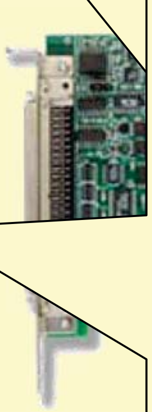

C40-A-400-E (Magmotor)

Hardware architecture

- Introductions
- **Overview**
  - Precision Farming
  - **ION Robotic Mower**
  - DARPA Challenge
  - ION Mini Urban Challenge
  - Outreach
- Autonomous GNC
- Lego® Mindstorms Intro
- Lego® Mindstorms Challenge

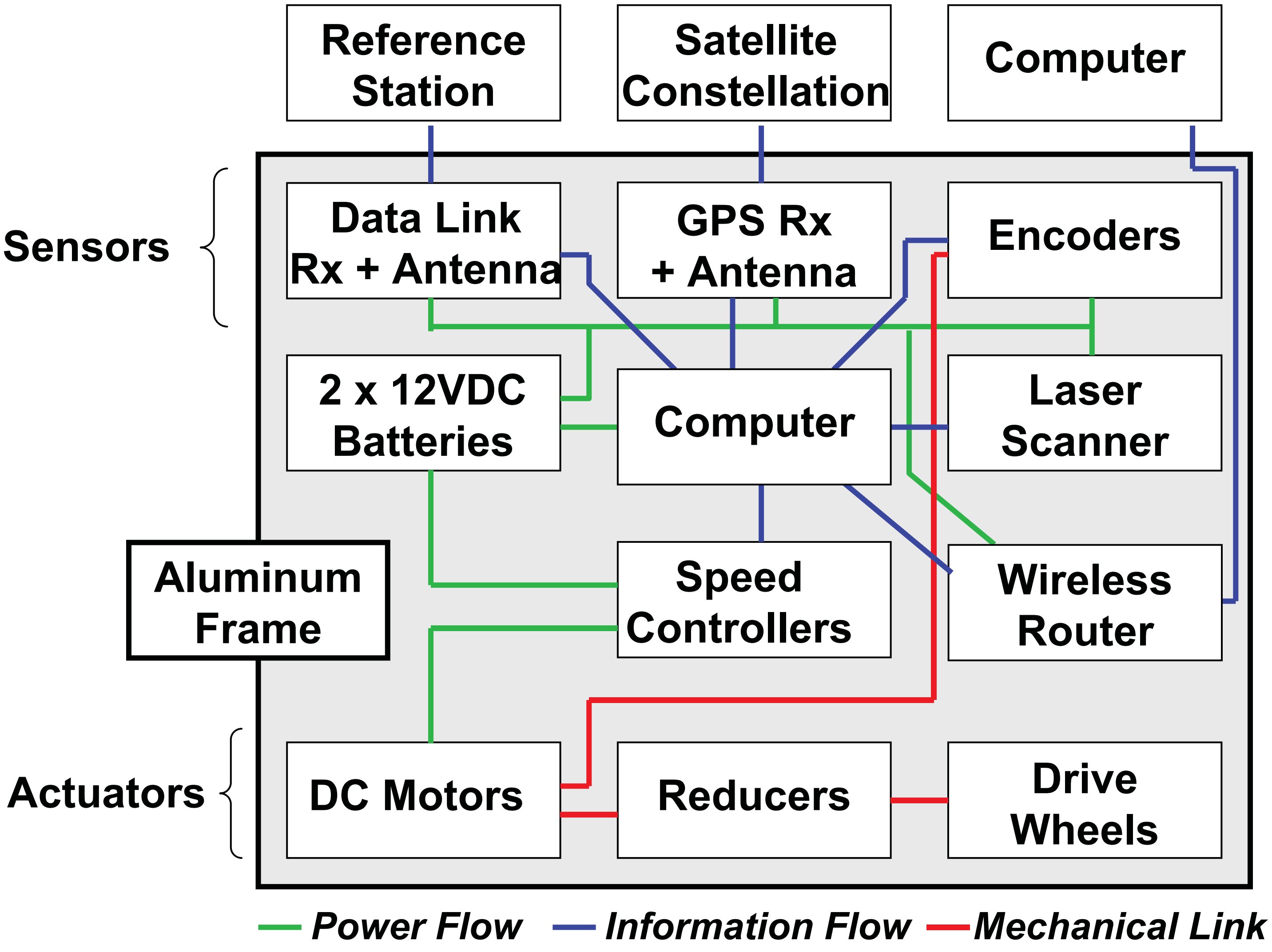

Reference Station

Satellite Constellation

Computer

Sensors

Data Link Rx + Antenna

GPS Rx + Antenna

Encoders

2 x 12VDC Batteries

Computer

Laser Scanner

Aluminum Frame

Speed Controllers

Wireless Router

Actuators

DC Motors

Reducers

Drive Wheels

— *Power Flow* — *Information Flow* — *Mechanical Link*

- Introductions
- **Overview**
  - Precision Farming
  - ION Robotic Mower
  - **DARPA Challenge**
  - ION Mini Urban Challenge
  - Outreach
- Autonomous GNC
- Lego® Mindstorms Intro
- Lego® Mindstorms Challenge

DARPA Urban Challenge

- The DARPA Urban Challenge is an autonomous vehicle research program developing technology to keep warfighters off the battlefield, out of harm's way.
- In the competition autonomous ground vehicles maneuver through a mock city environment:
  - Executing simulated supply missions
  - Merging into moving traffic
  - Navigating traffic circles
  - Negotiating busy intersections
  - Avoiding obstacles

DARPA Urban Challenge

- Introductions
- **Overview**
  - Precision Farming
  - ION Robotic Mower
  - **DARPA Challenge**
  - ION Mini Urban Challenge
  - Outreach
- Autonomous GNC
- Lego® Mindstorms Intro
- Lego® Mindstorms Challenge

Created with Flip4Mac WMV Demo
www.Flip4Mac.com

Movie Clip from
http://www.darpa.mil/grandchallenge/gallery.asp
called:
DARPA_highlight_preview3.wmv

• Introductions

• **Overview**
  • Precision Farming
  • ION Robotic Mower
  • DARPA Challenge
  • **ION Mini Urban Challenge**
  • Outreach

• Autonomous GNC

• Lego® Mindstorms Intro
• Lego® Mindstorms Challenge

Mini-Urban Challenge

- National HS Competition held in conjunction with the ION college Robotic Lawnmower Competition (Dayton, OH)
- Challenge model based on DARPA’s Urban Challenge
- HS Students must develop a robotic, autonomous ground vehicle using a LEGO® MindStorms kit to navigate through a LEGO® city
- An autonomous ground vehicle is a vehicle that navigates and drives entirely on its own with no human driver and no remote control.
- Uses a variety of sensors to carry out the task it has been assigned.
- Autonomous vehicles are a focus point of DoD and it has been Congressionally mandated that “It shall be a goal of the Armed Forces to achieve the fielding of unmanned, remotely controlled technology such that… by 2015, one-third of the operational ground combat vehicles are unmanned.”

DARPA Urban Challenge 2007

Mini-Urban Challenge

- The purpose of this competition is to challenge high school students to design and operate a robotic unmanned car built from a LEGO® MindStorms kit that can accurately navigate through a LEGO® city.
- In the competition the LEGO® cars will maneuver through a mock LEGO® city:
  - Driving along the roads
  - Following traffic signs (stop signs, speed limits, etc.)
  - Stopping at stores
  - Avoiding pedestrians

- Introductions
- **Overview**
  - Precision Farming
  - ION Robotic Mower
  - DARPA Challenge
  - ION Mini Urban Challenge
  - **Outreach**
- Autonomous GNC
- Lego® Mindstorms Intro
- Lego® Mindstorms Challenge

Outreach – Next Generation Engineers

Large need for more students to pursue engineering degrees

- Baby boomer retirements will deplete the science and engineering workforce by 50%
- “Over the next 18 months, 27 percent of the engineering work force will be eligible for retirement”
- Fewer than 6% of high school seniors plan to pursue engineering degrees
- One-third drop in the number of U.S. students interested in pursuing engineering degrees throughout the past decades

- Introductions
- **Overview**
  - Precision Farming
  - ION Robotic Mower
  - DARPA Challenge
  - ION Mini Urban Challenge
  - **Outreach**
- Autonomous GNC
- Lego® Mindstorms Intro
- Lego® Mindstorms Challenge

Outreach – Next Generation Engineers

- To encourage the use of navigation technologies for societal and economic development and environmental protection
- To provide a knowledgeable engineering workforce in Africa
- To initiate international scientific collaborations


Disaster Relief


Air Navigation


Land Navigation


Water Navigation

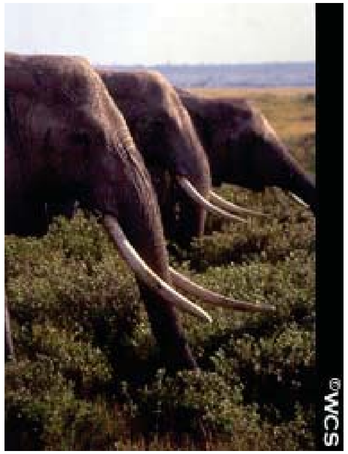

Wildlife Conservation


Precision Farming

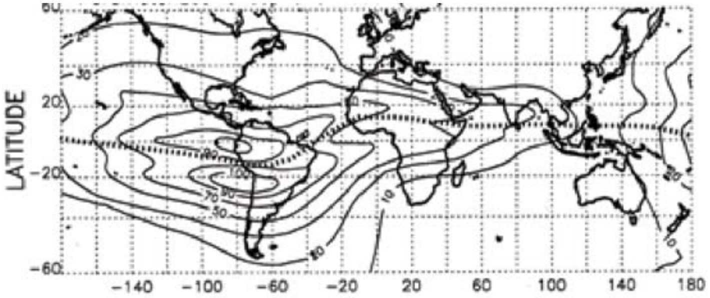

Scientific Exploration

Autonomous Vehicle GNC

- GNC issues for autonomous vehicles
  - Basic Control (Mikel - 30 minutes)

    Sensors description
    Outer Loop
    Inner Loop

- ION Robotic Lawn Mower – (Jade - 1 hour)
  - Miami University’s Approach
- DARPA Urban Challenge (Casey - 1 hour)
  - DARPA Vehicles:

    Carnegie Mellon ‘05 & ’07
    Stanford ‘05 & ‘07
- MUC – ION presentation

Estimator and Controller

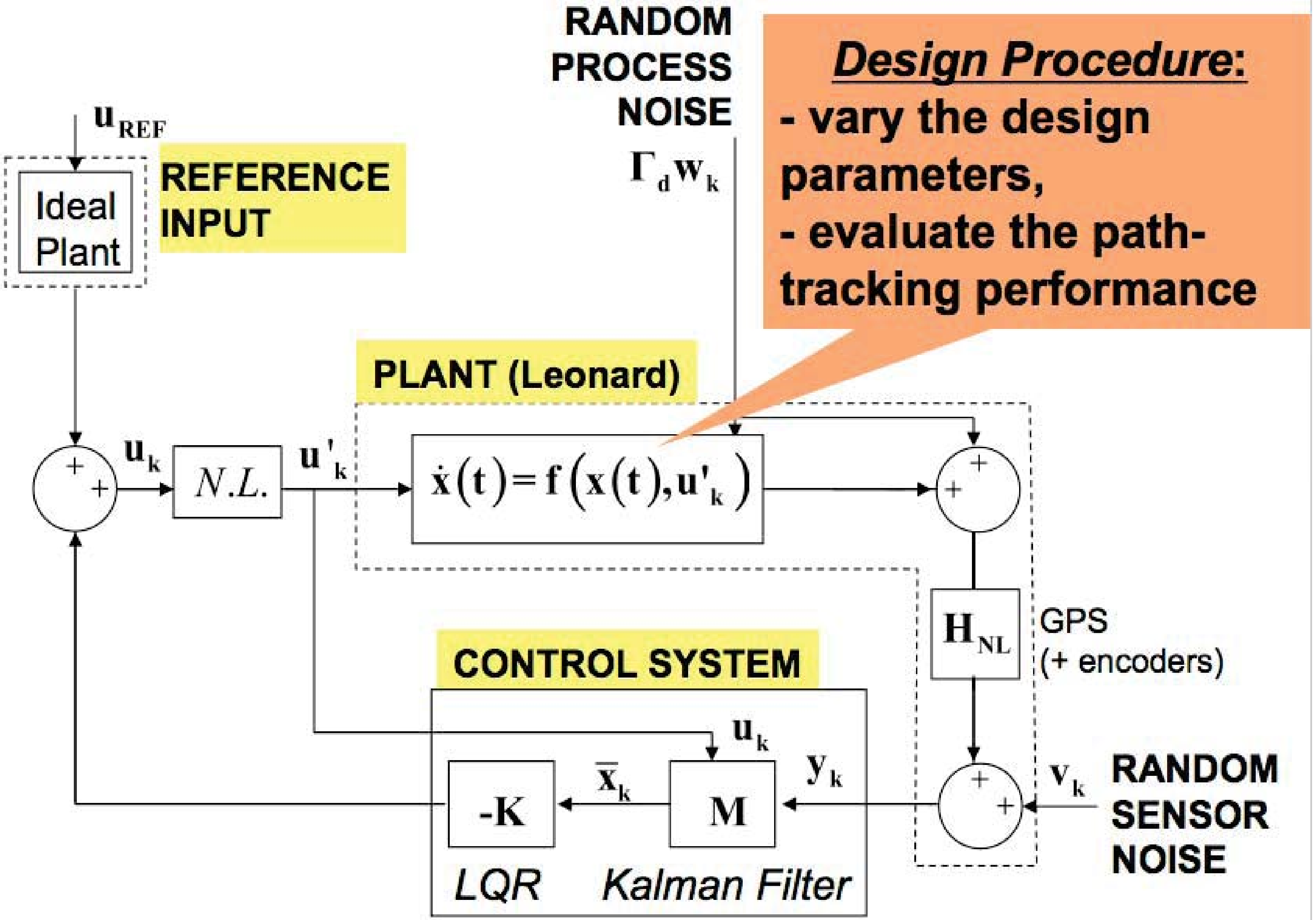

***Design Procedure*:**

- vary the design parameters,

- evaluate the path-tracking performance

DC Power Supply Example

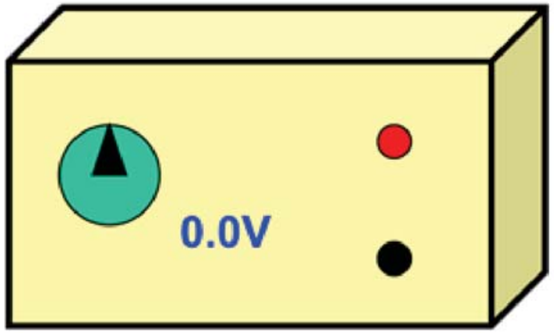

Power supply
with Voltage output

Suppose that by turning the button 90 degrees clockwise, it is supposedly outputting 5 VDC

How do we make sure that the voltage is 5VDC?

Example Courtesy of Dr. Maarten Uijt de Haag, Ohio University

DC Power Supply Example

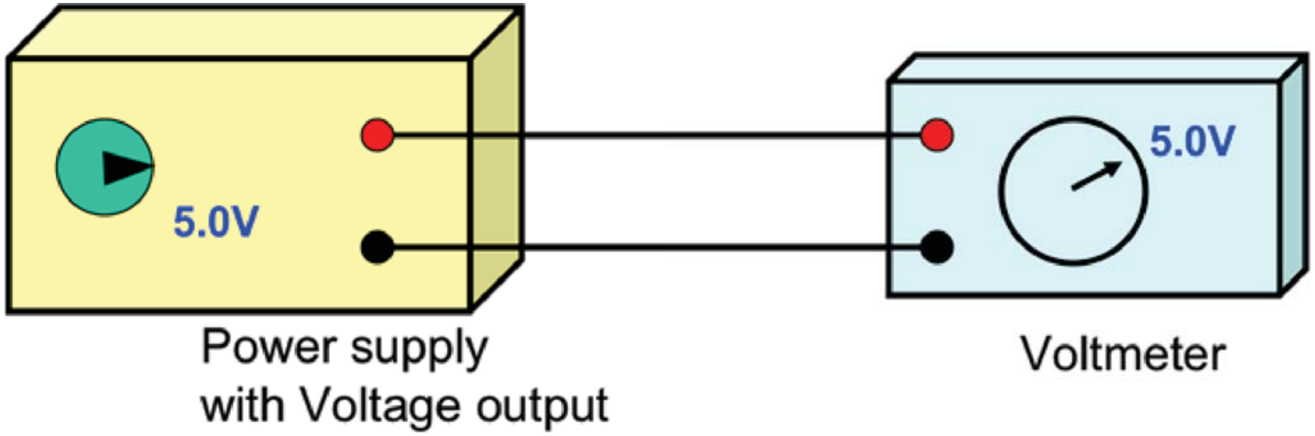

By measuring it with a SENSOR (= Voltmeter)

The **SENSOR** will give you **FEEDBACK**

DC Power Supply Example

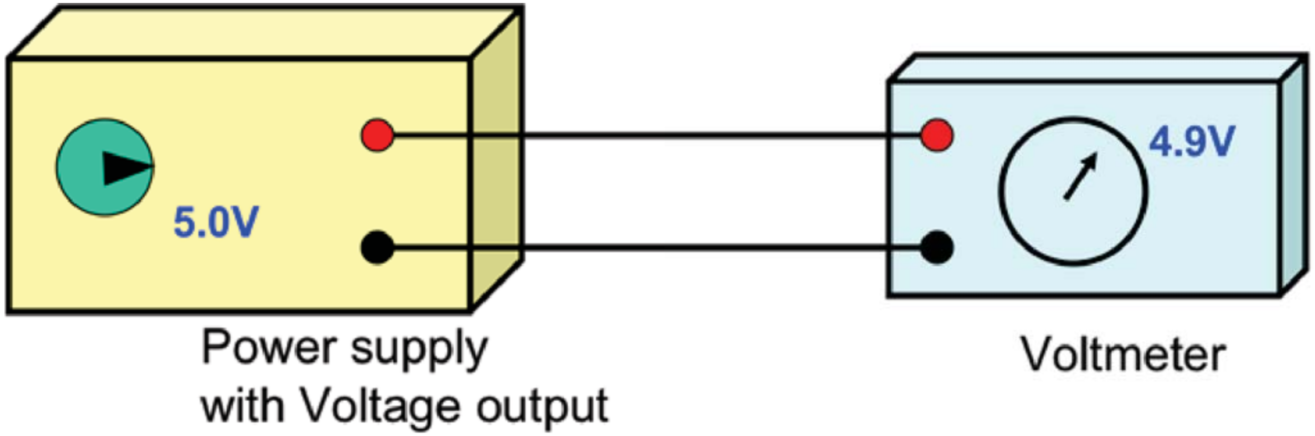

Suppose that the Voltage measured is not 5VDC?
What would you do to get 5VDC?

DC Power Supply Example

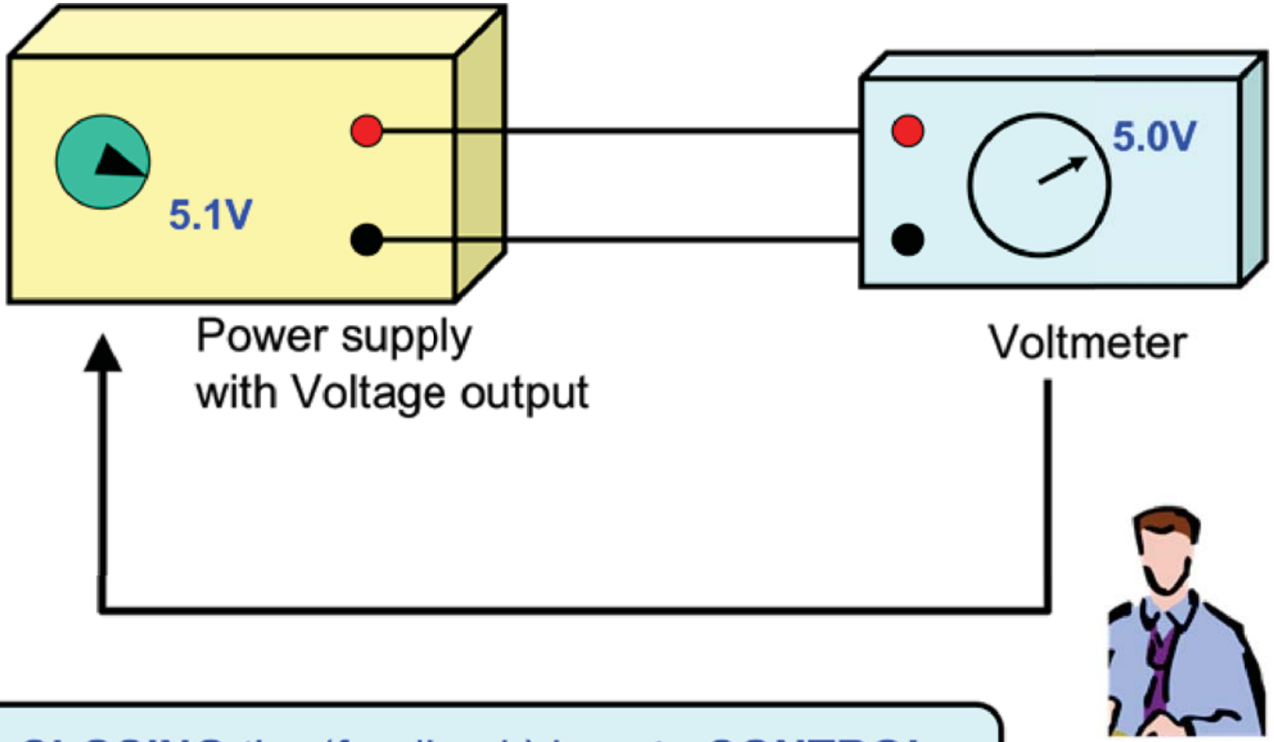

You are **CLOSING** the (feedback) loop to **CONTROL** the output of the power supply to the right voltage

DC Motor Example

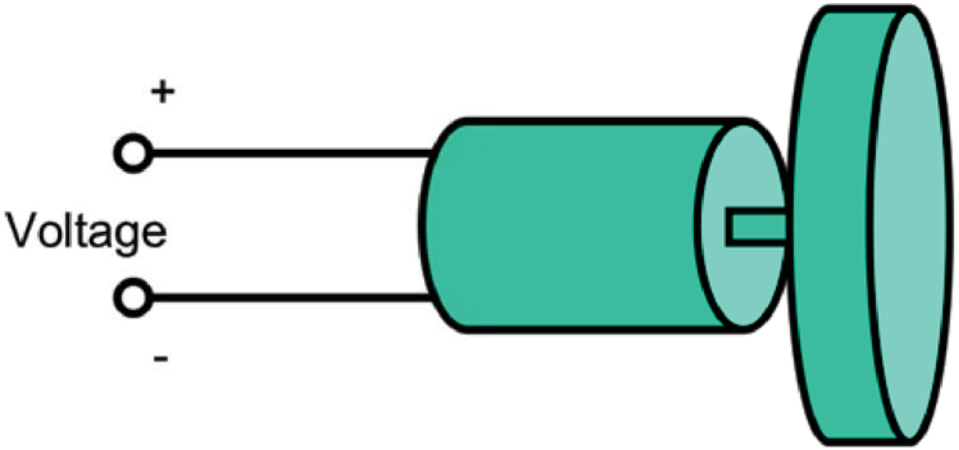

Application of a voltage source (with enough power) make the motor rotate its output shaft.

For example, our motors will run at 7,800 rotations-per-minute (RPM) if unloaded and at the maximum voltage (= 12 VDC)

DC Motor Example

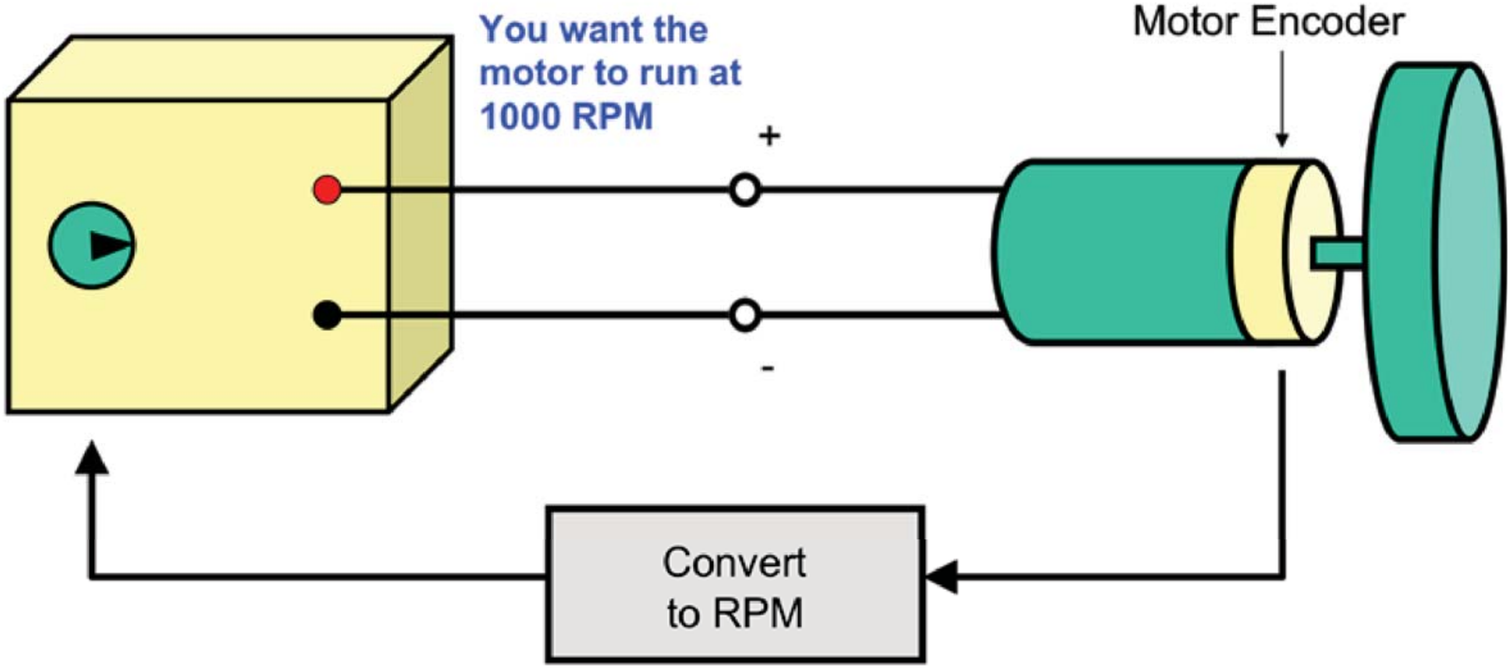

The **motor encoders** (= sensor) measure the shaft rotation in a certain time interval. For example, the axis rotated 120 degrees in the last 1 ms.

- Introductions
- Overview
- **Autonomous GNC**
  - **Basic Control**
  - ION Robotic Mower
  - DARPA Challenge
- Lego® Mindstorms Intro
- Lego® Mindstorms Challenge

Basic Feedback Controller

In general

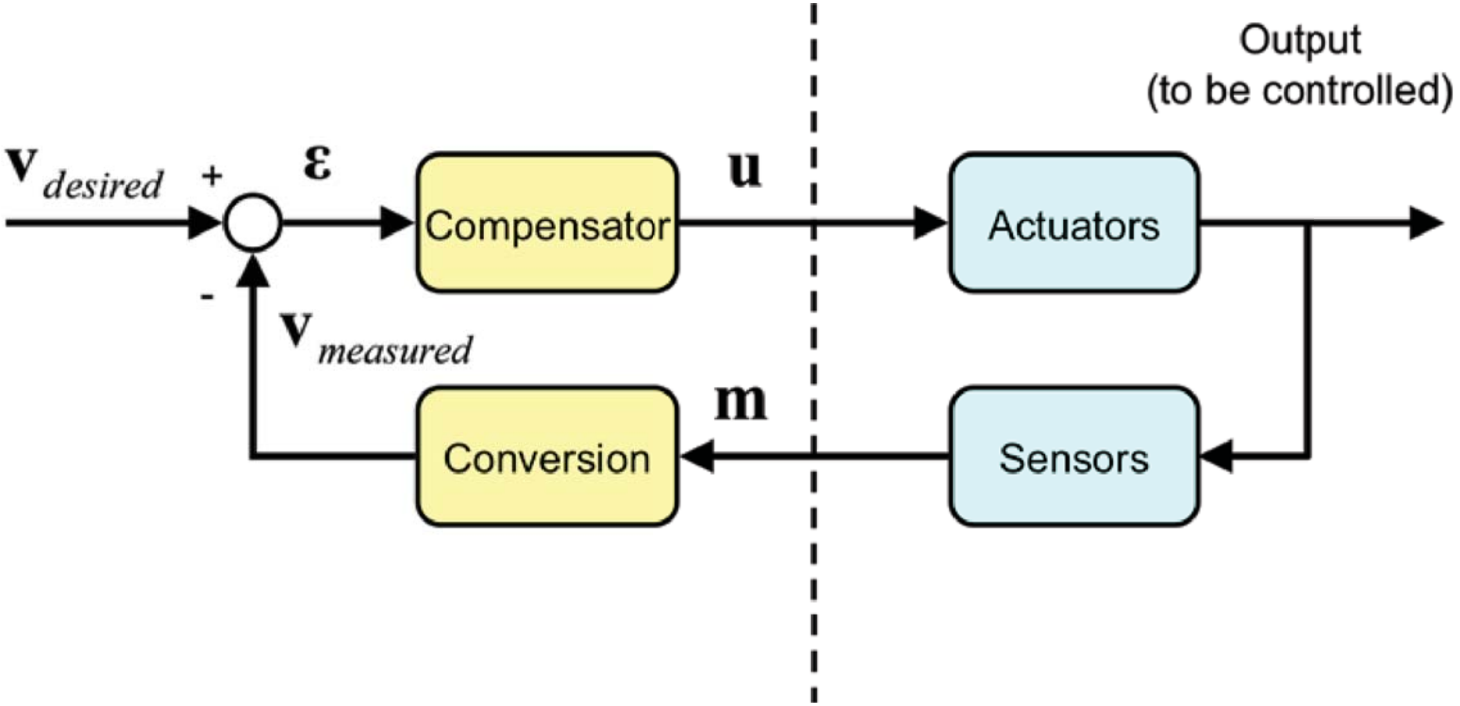

Basic Feedback Controller

However, in reality

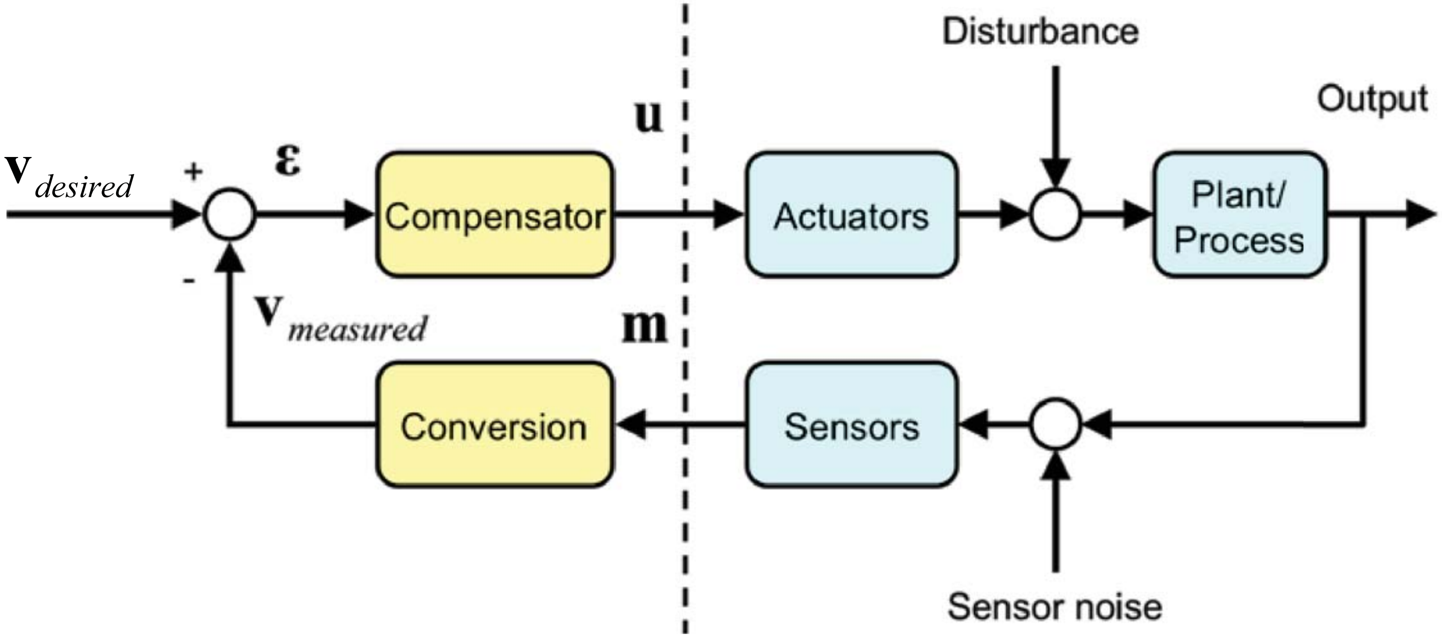

- Introductions
- Overview
- **Autonomous GNC**
  - **Basic Control**
  - ION Robotic Mower
  - DARPA Challenge
- Lego® Mindstorms Intro
- Lego® Mindstorms Challenge

The Control Loop

Autonomous Vehicle Navigation & Control Loop

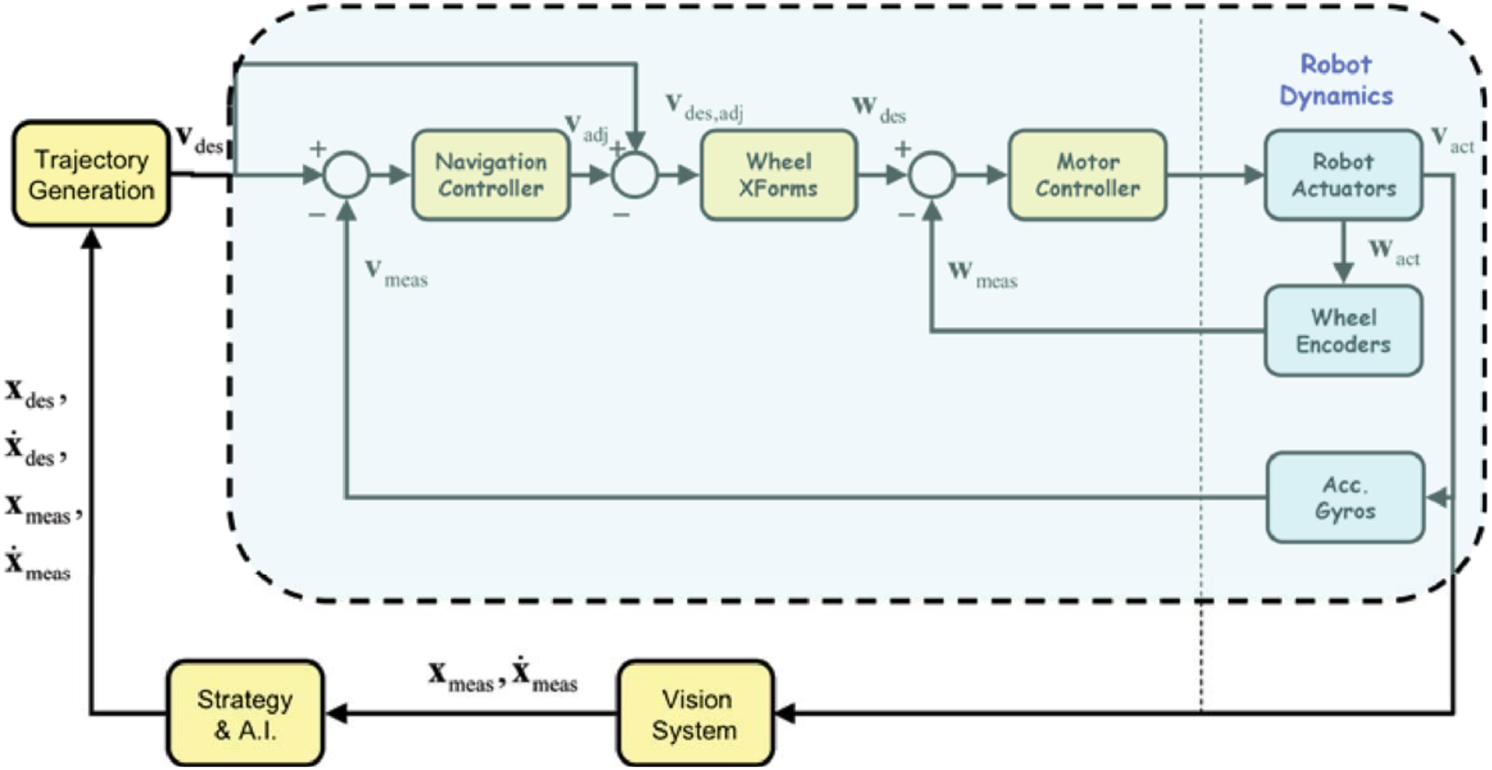

Note: x = position
xdot = v = velocity

Controller: Inner Loop

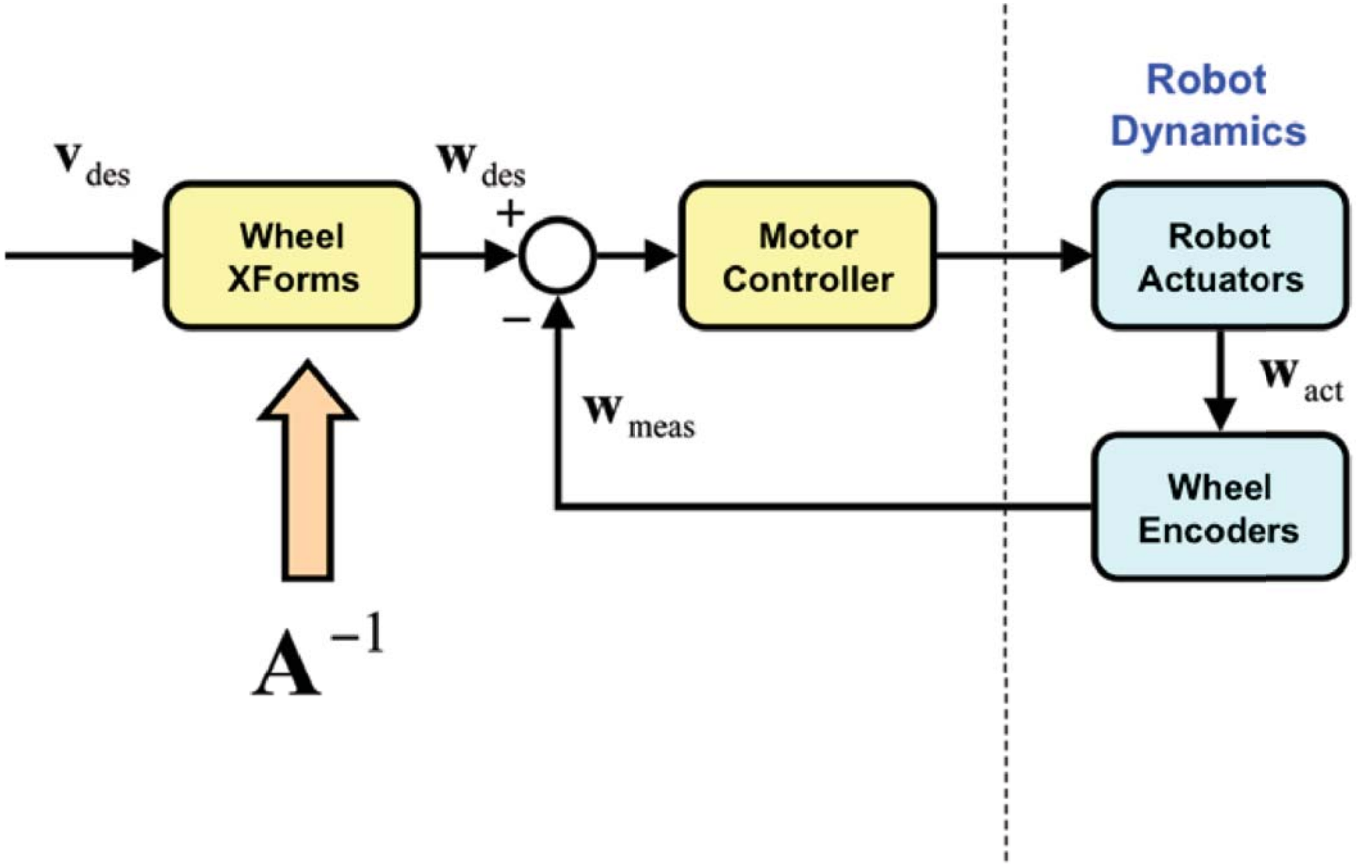

Note: A^{-1} = Transformation matrix from v to w

Other Sensors

- Use local sensors to measure $\mathbf{v}$ directly:
  - Accelerometers:
    - measure body acceleration
    - in other words: accelerations along x_b, y_b
    - units: g (= 9.8 m/s^2)
  - Gyroscopes
    - measure body angular rates
    - in other words: angular rates around z_b
    - units: degrees/second = °/s

Accelerometer

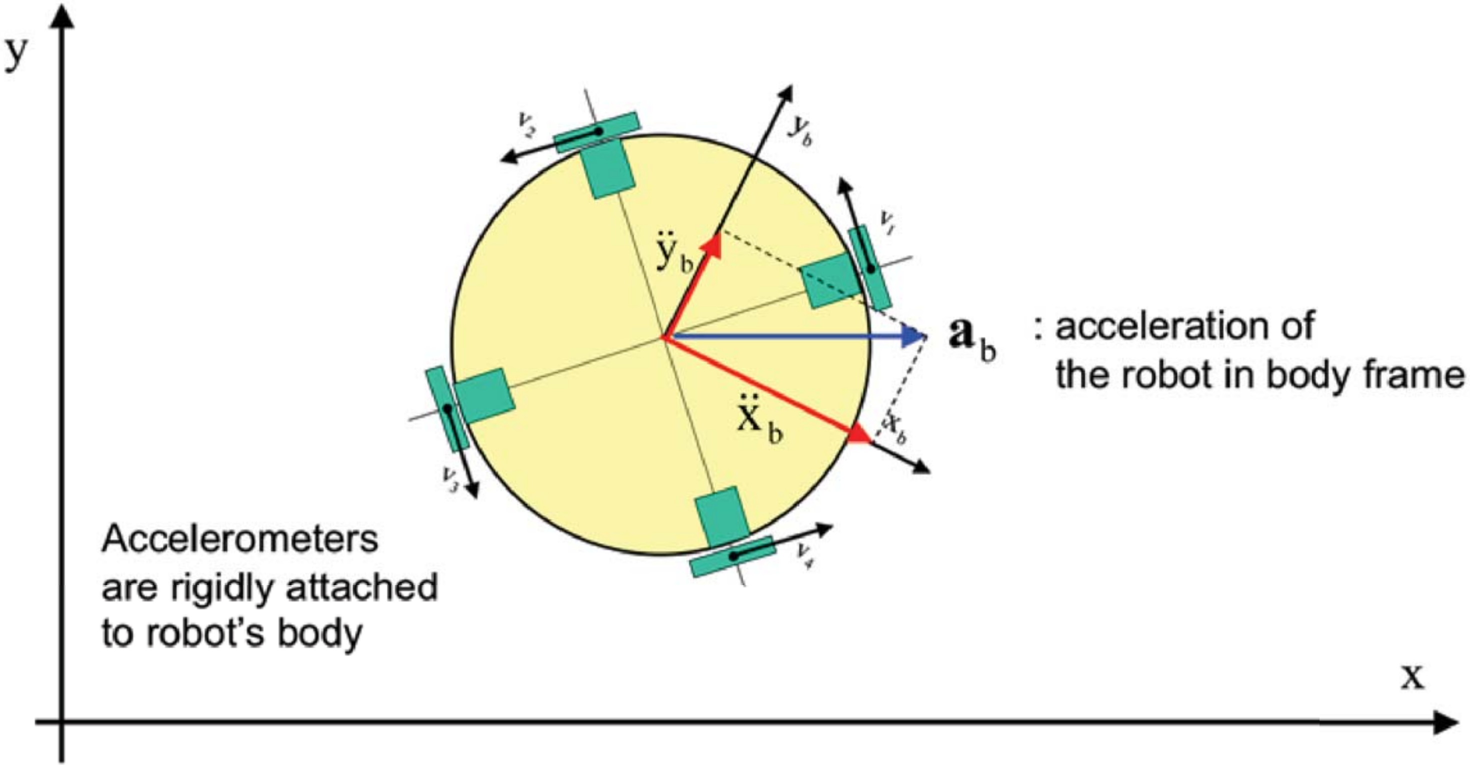

$\mathbf{a}_b$: acceleration of the robot in body frame

Accelerometers are rigidly attached to robot's body

- Introductions
- Overview
- **Autonomous GNC**
  - **Basic Control**
  - ION Robotic Mower
  - DARPA Challenge
- Lego® Mindstorms Intro
- Lego® Mindstorms Challenge

Gyroscope

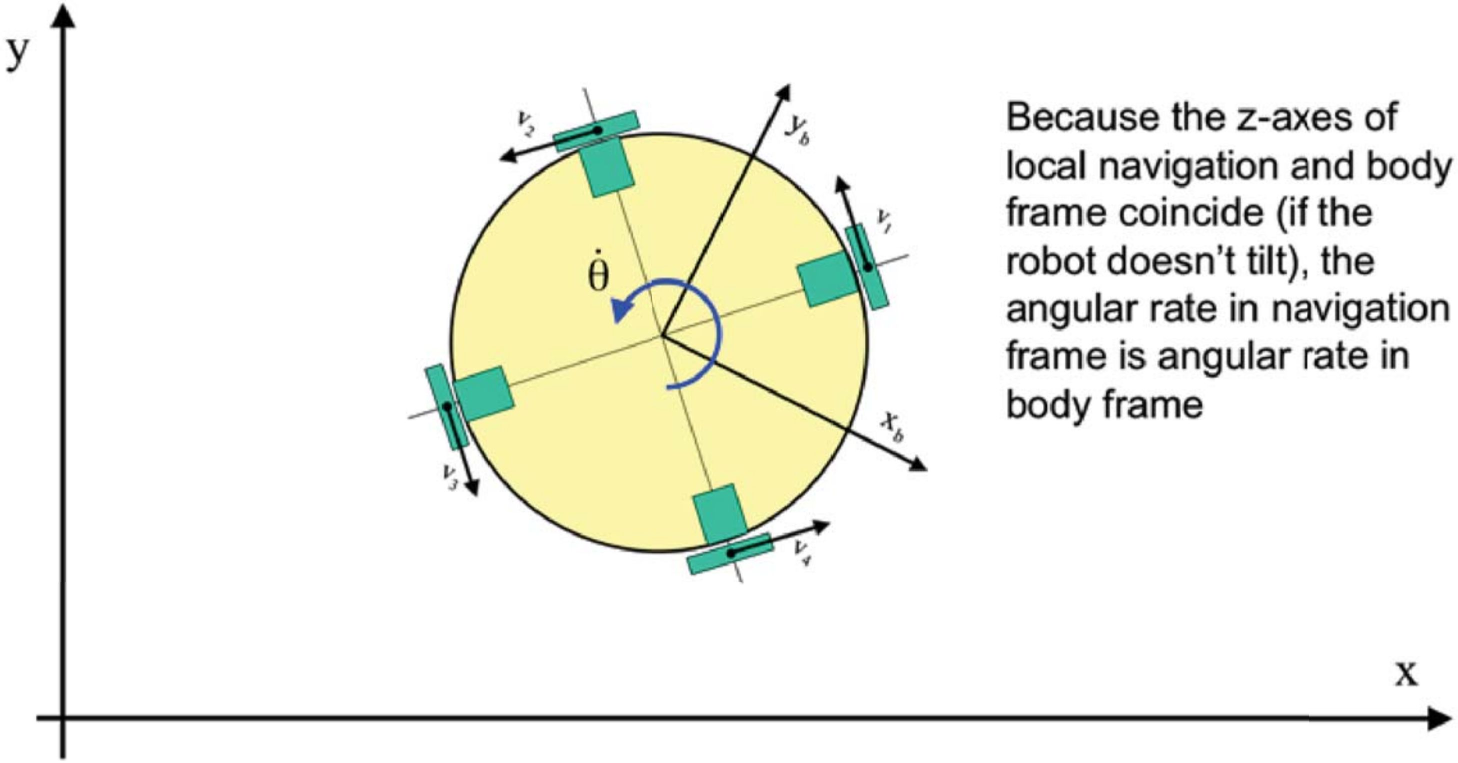

Because the z-axes of local navigation and body frame coincide (if the robot doesn't tilt), the angular rate in navigation frame is angular rate in body frame

Controller: Middle Loop

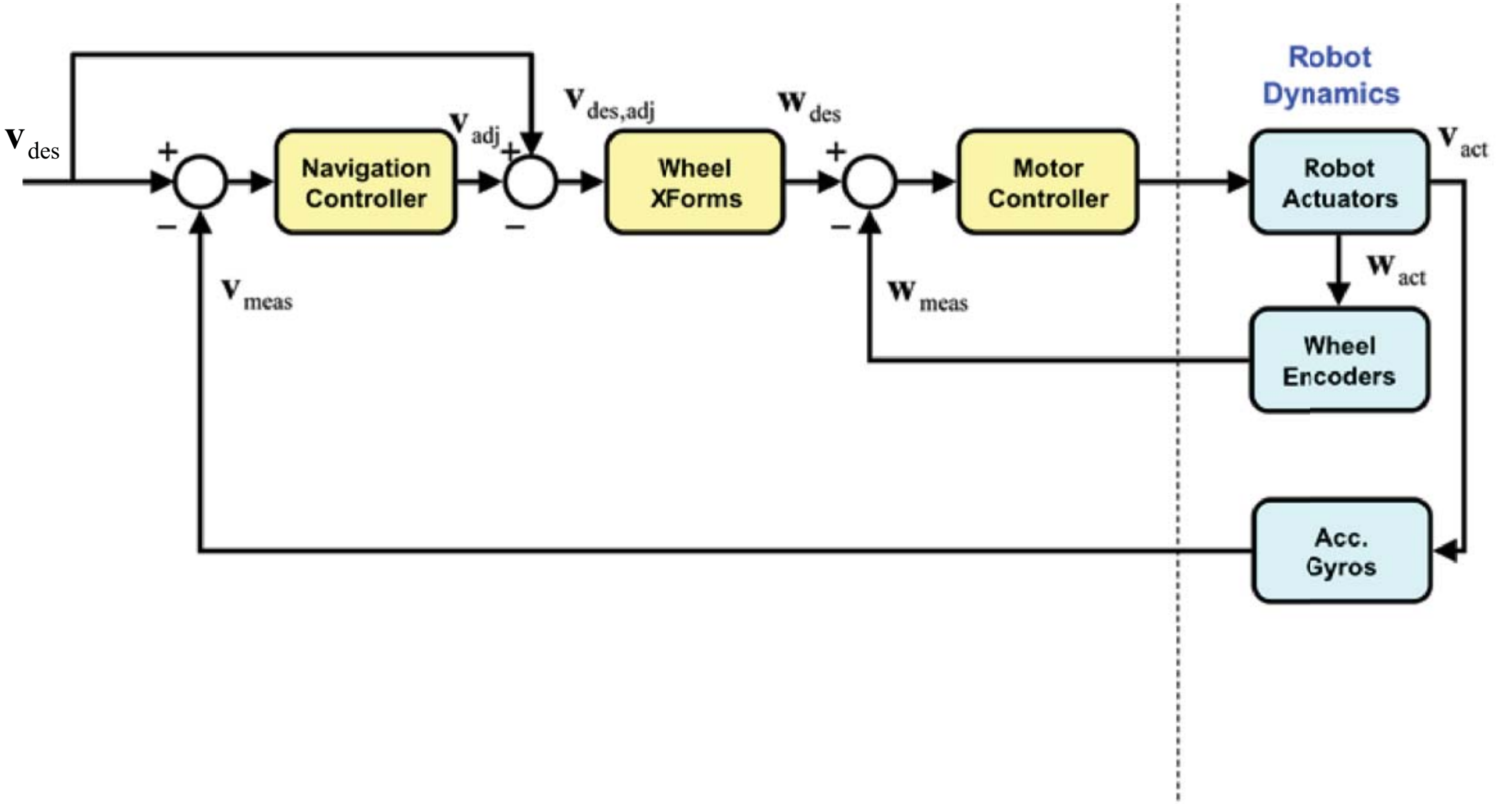

Ohio University System Design

- Introductions
- Overview
- **Autonomous GNC**
  - **Basic Control**
  - ION Robotic Mower
  - DARPA Challenge
- Lego® Mindstorms Intro
- Lego® Mindstorms Challenge

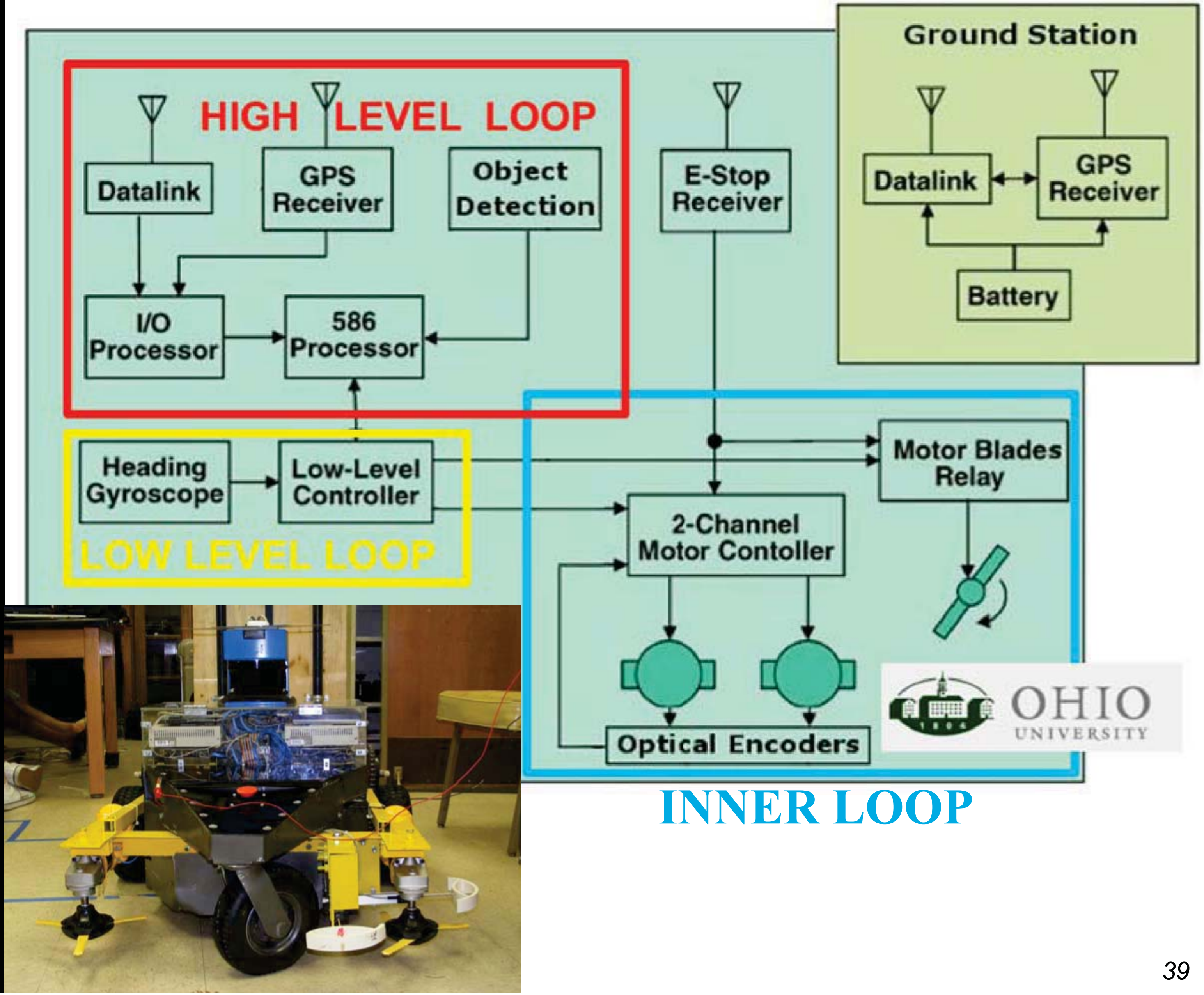

Autonomous Vehicle GNC

- Introductions
- Overview
- **Autonomous GNC**
  - Basic Control
  - ION Robotic Mower
  - DARPA Challenge
- Lego® Mindstorms Intro
- Lego® Mindstorms Challenge

- GNC issues for autonomous vehicles
  - Basic Control (Mikel - 30 minutes)
    - Sensors description
    - Outer Loop
    - Inner Loop
- **ION Robotic Lawn Mower – (Jade - 1 hour)**
  - **Miami University's Approach**
- DARPA Urban Challenge (Casey - 1 hour)
  - DARPA Vehicles:
    - Carnegie Mellon '05 & '07
    - Stanford '05 & '07
- MUC – ION presentation

ION Robotic Lawn Mower: Miami RedBlade

- Introductions
- Overview
- **Autonomous GNC**
  - Basic Control
  - **ION Robotic Mower**
  - DARPA Challenge
- Lego® Mindstorms Intro
- Lego® Mindstorms Challenge

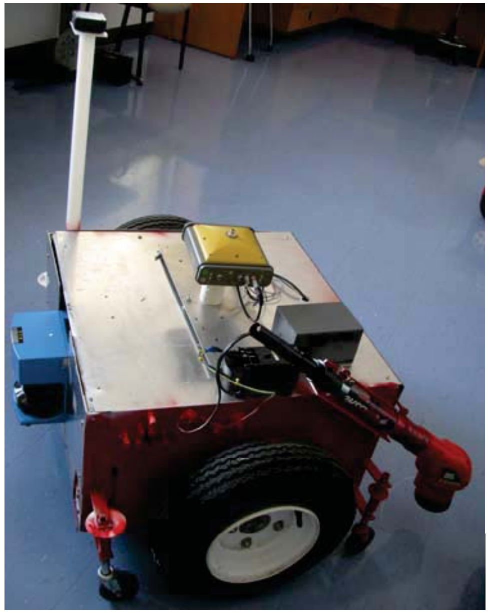

Competition Rule Evolution

- Introductions
- Overview
- **Autonomous GNC**
  - Basic Control
  - **ION Robotic Mower**
  - DARPA Challenge
- Lego® Mindstorms Intro
- Lego® Mindstorms Challenge

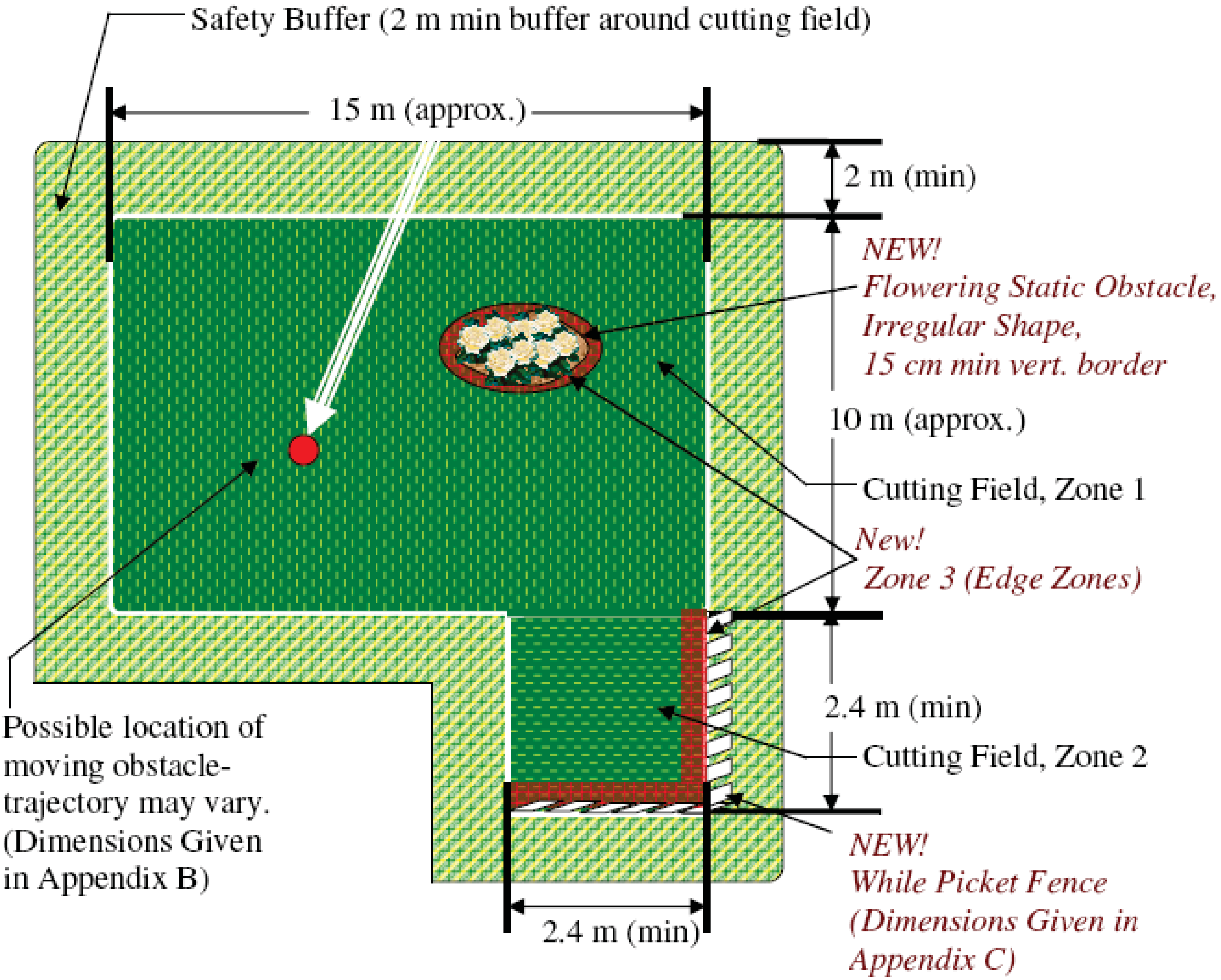

Moving Obstacle

- Height: 36", Width: 20" (at the base) Length: 32"
- Max Speed: 3 m/s (10.8 km/hr)
- Rules for Moving Obstacle Motion:
  - The obstacle will not collide the teams' mowers (however the teams' mowers may collide with the moving obstacle).
  - The moving obstacle will follow a linear path (+/- 10 degrees) along either the short or long axis of the field.
- The obstacle will randomly start and stop along the path.
  - time stopped is defined by a random value uniformly distributed from 10-300 seconds
  - time in motion defined by a random value uniformly distributed from 0-30 seconds.
- Also note: in the case that the moving obstacle breaks down it will become a static obstacle and must be dealt with appropriately.

Red Blade Design Components

- Introductions
- Overview
- **Autonomous GNC**
  - Basic Control
  - **ION Robotic Mower**
  - DARPA Challenge
- Lego® Mindstorms Intro
- Lego® Mindstorms Challenge

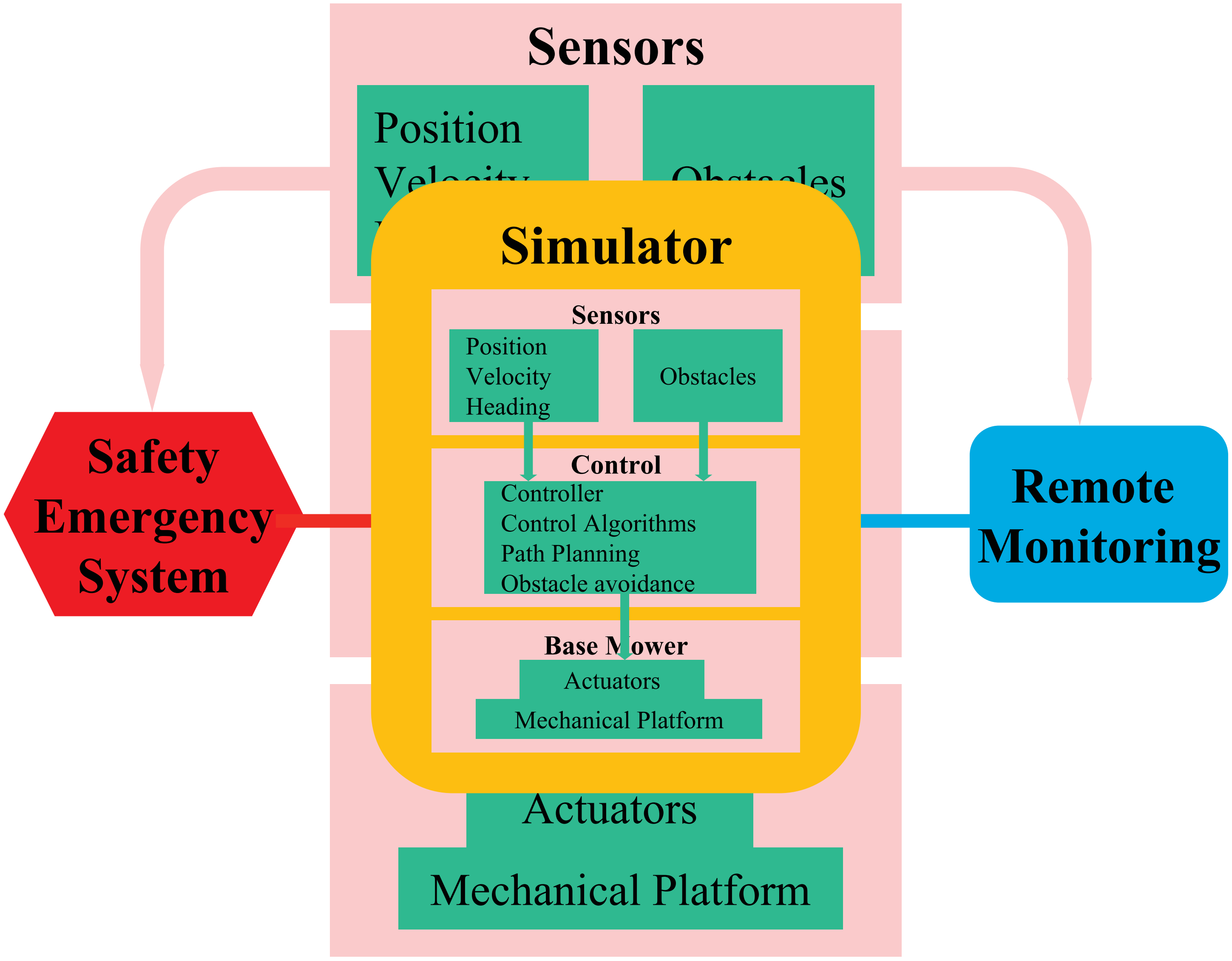

RedBlade I: Hardware

Garmin GPS16
2 * $145

Hall Sensor
$40

HRM3200 Compass
$350 (Donation)

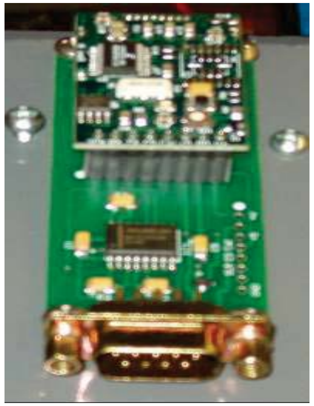

PH Servos
$1200 (Donation)

Freewave Modem
$3000 (Donation)

Snapper Mower
$5000 (Donation)

RedBlade I: Custom DGPS

- Introductions
- Overview
- **Autonomous GNC**
  - Basic Control
  - **ION Robotic Mower**
  - DARPA Challenge
- Lego® Mindstorms Intro
- Lego® Mindstorms Challenge

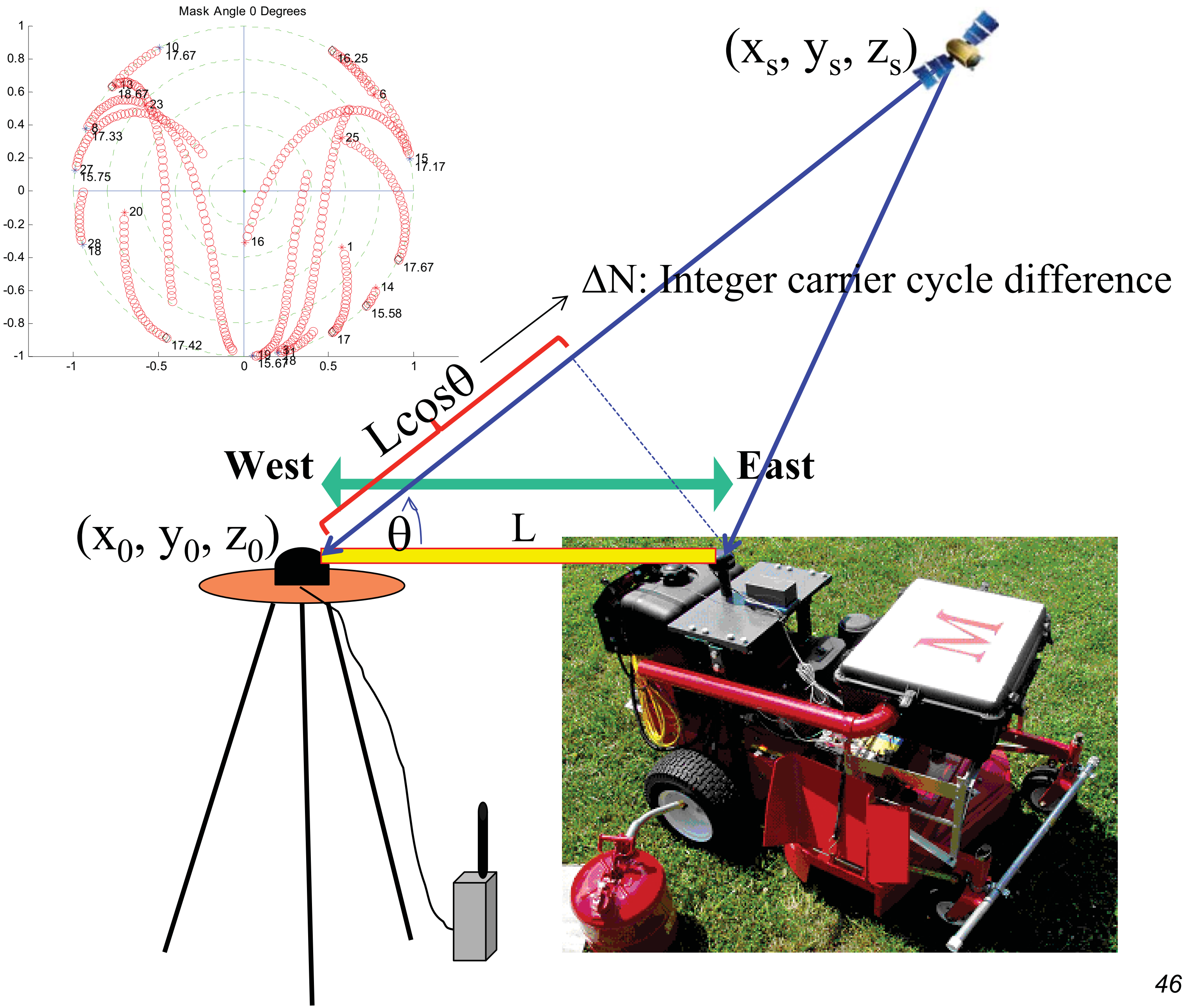

RedBlade I: Custom DGPS

- Introductions
- Overview
- **Autonomous GNC**
  - Basic Control
  - **ION Robotic Mower**
  - DARPA Challenge
- Lego® Mindstorms Intro
- Lego® Mindstorms Challenge

Carrier phase measurement: $\phi = r - I + T + c\left(\delta t_u - \delta t^s\right) + N\lambda + \varepsilon$

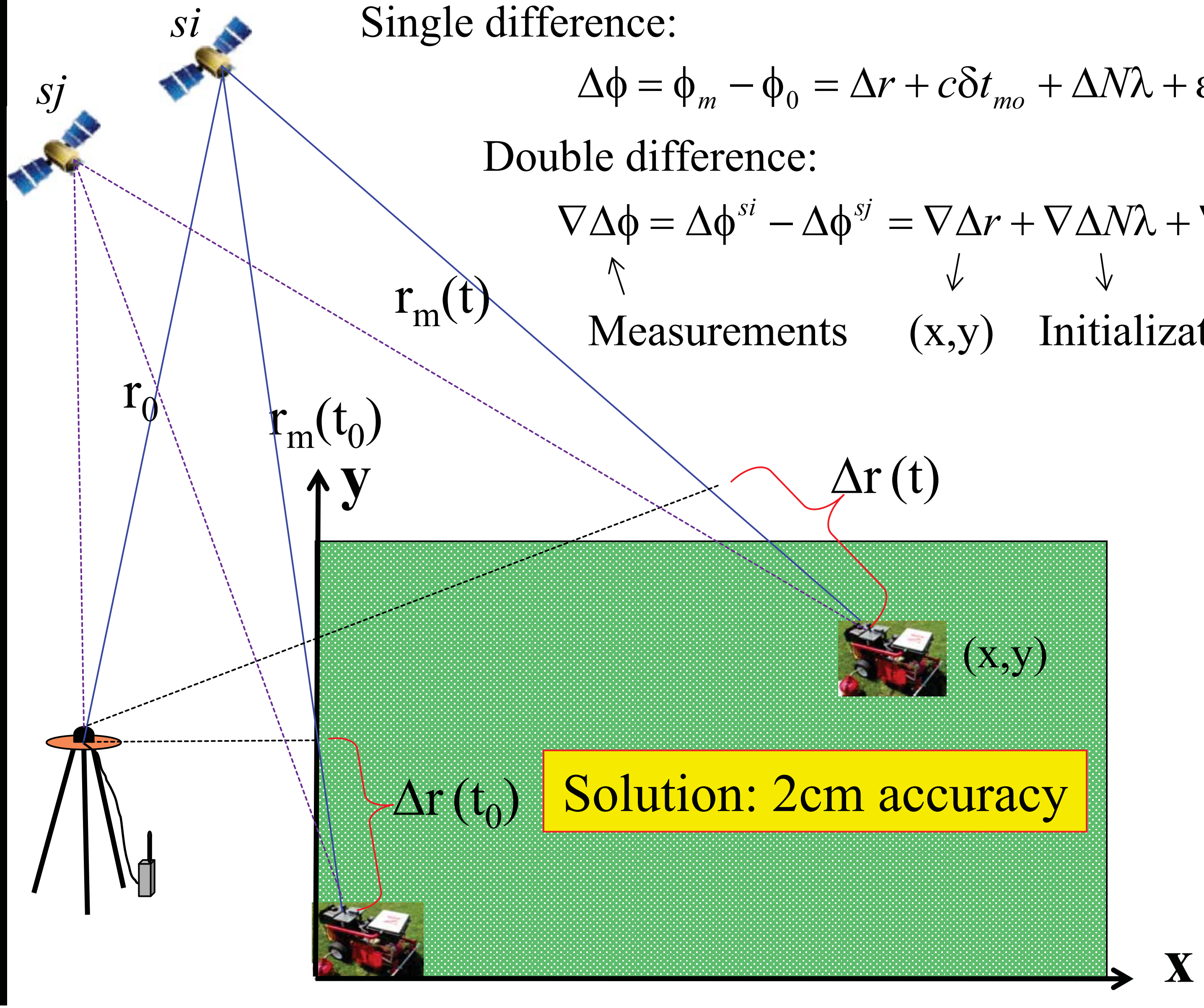

Single difference:

$$\Delta\phi = \phi_m - \phi_0 = \Delta r + c\delta t_{mo} + \Delta N\lambda + \varepsilon_{m0}$$

Double difference:

$$\underset{\substack{\uparrow \\ \text{Measurements}}}{\nabla\Delta\phi} = \Delta\phi^{si} - \Delta\phi^{sj} = \underset{\substack{\downarrow \\ (x,y)}}{\nabla\Delta r} + \underset{\substack{\downarrow \\ \text{Initialization}}}{\nabla\Delta N\lambda} + \nabla\varepsilon_{m0}$$

RedBlade I: Home-Made Wheel Encoder

- Introductions
- Overview
- **Autonomous GNC**
  - Basic Control
  - **ION Robotic Mower**
  - DARPA Challenge
- Lego® Mindstorms Intro
- Lego® Mindstorms Challenge

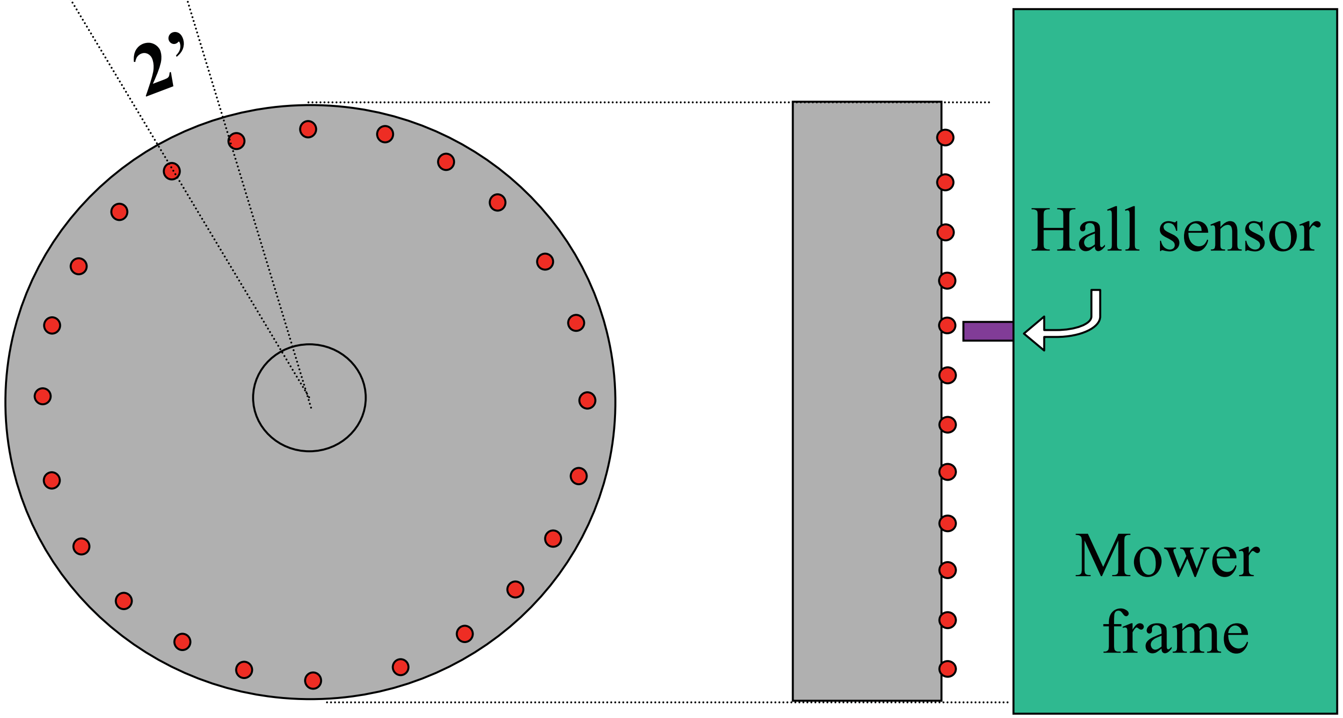

Control Architecture

- Introductions
- Overview
- **Autonomous GNC**
  - Basic Control
  - **ION Robotic Mower**
  - DARPA Challenge
- Lego® Mindstorms Intro
- Lego® Mindstorms Challenge

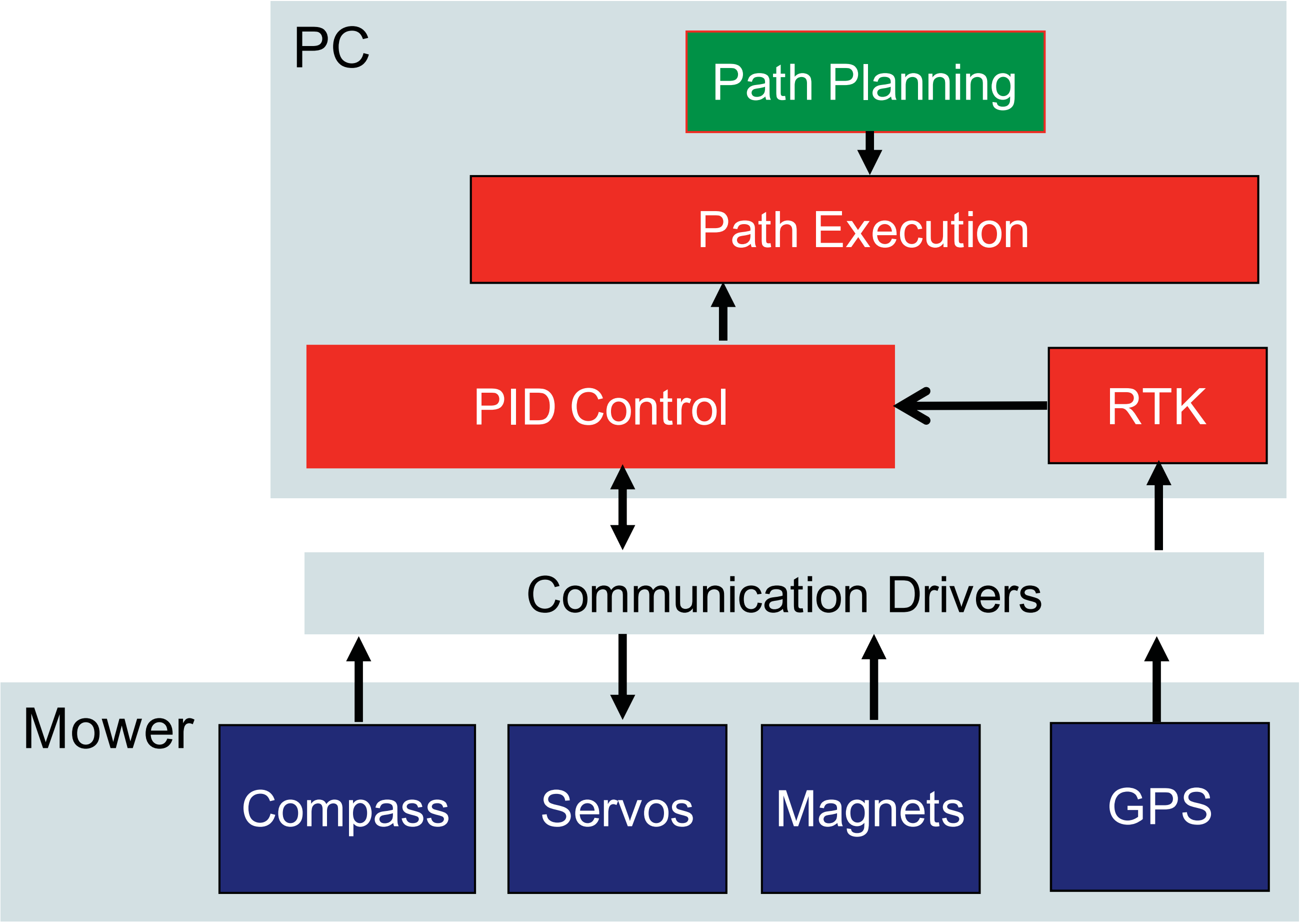

Path Planning

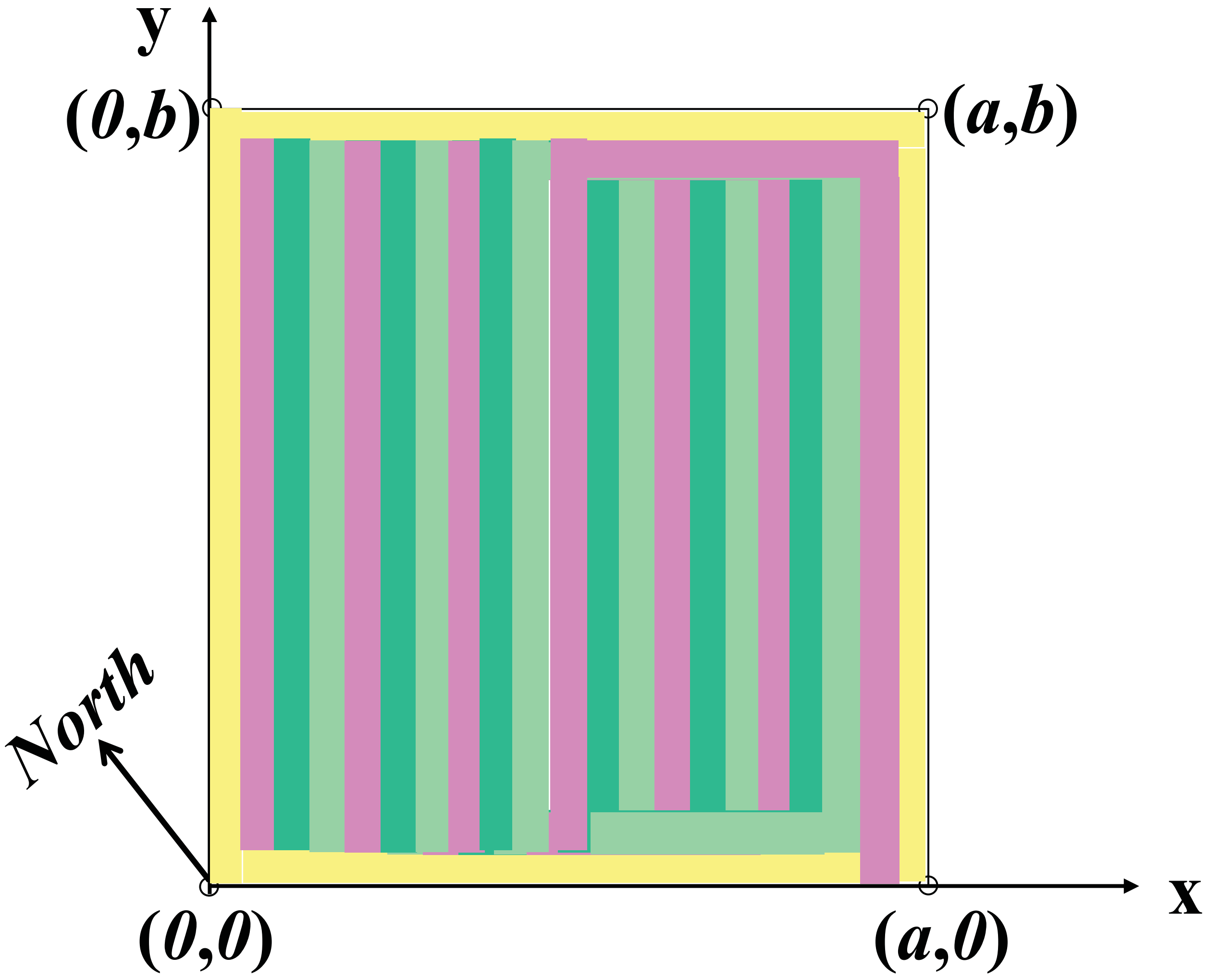

Control Algorithm

- Introductions
- Overview
- **Autonomous GNC**
  - Basic Control
  - **ION Robotic Mower**
  - DARPA Challenge
- Lego® Mindstorms Intro
- Lego® Mindstorms Challenge

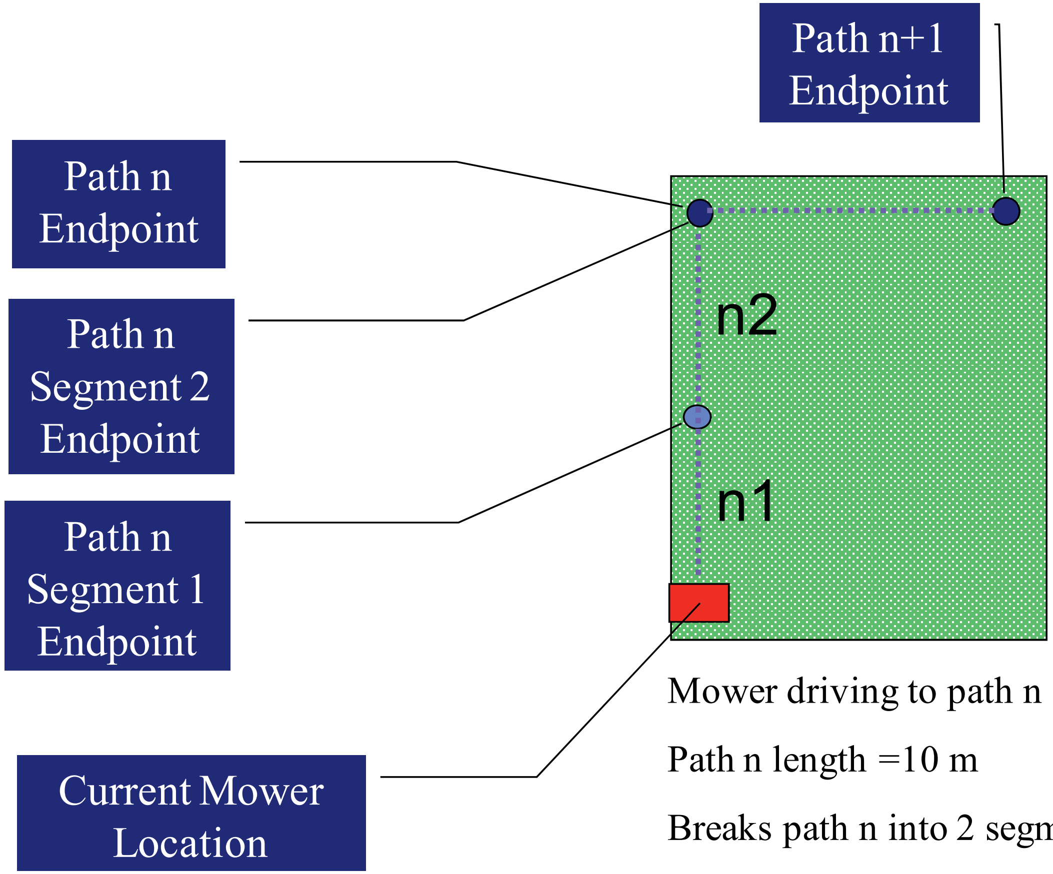

Mower driving to path n endpoint.

Path n length =10 m

Breaks path n into 2 segments: n1, n2

Given current GPS location, drive 5 meter North, stop,
Take new GPS reading and continues to n2 goal goal.

PID Control

- Introductions
- Overview
- **Autonomous GNC**
  - Basic Control
  - **ION Robotic Mower**
  - DARPA Challenge
- Lego® Mindstorms Intro
- Lego® Mindstorms Challenge

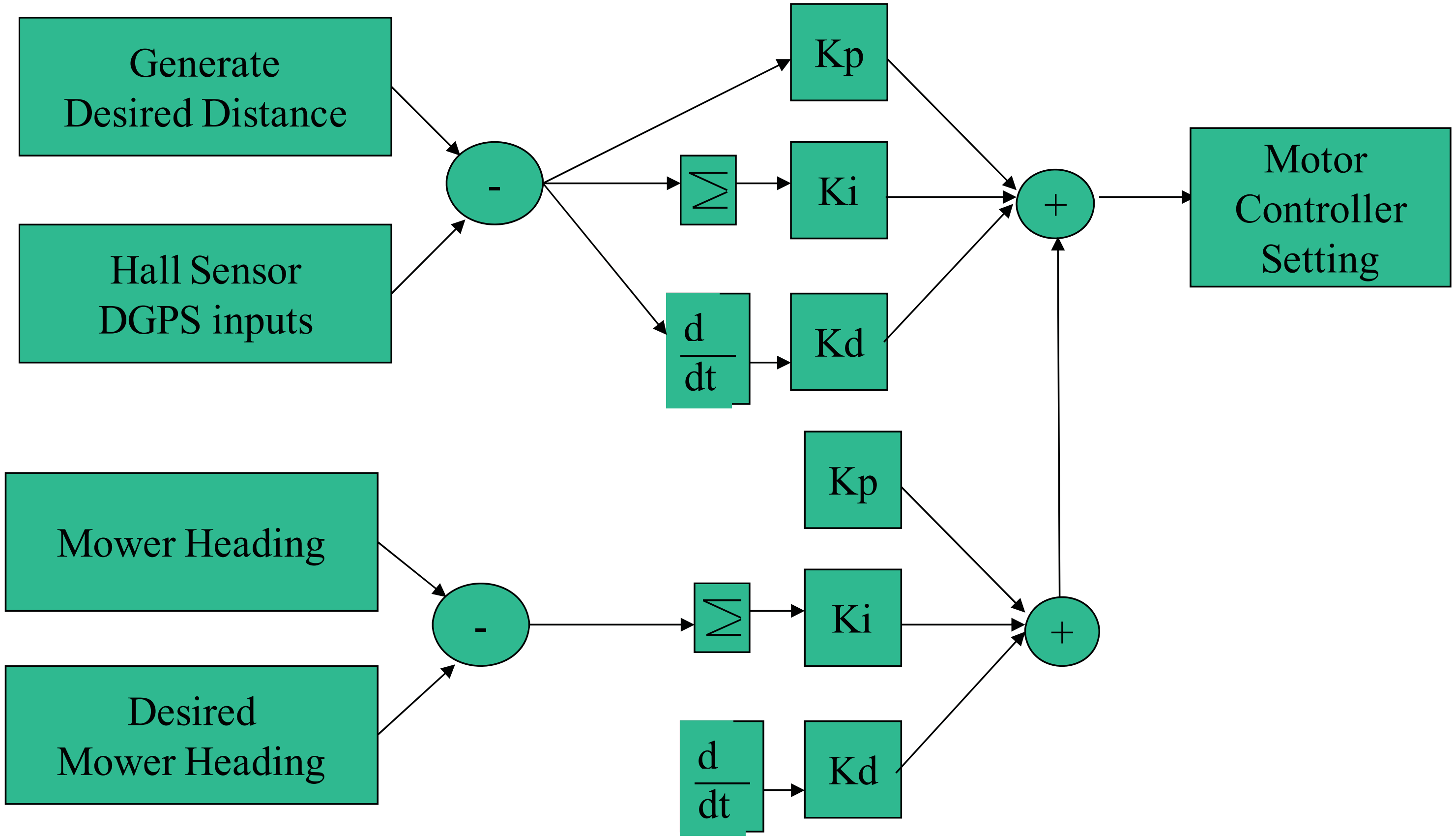

Competition Day

RedBlade II: Platform Re-design

- Introductions
- Overview
- **Autonomous GNC**
  - Basic Control
  - **ION Robotic Mower**
  - DARPA Challenge
- Lego® Mindstorms Intro
- Lego® Mindstorms Challenge

New base design

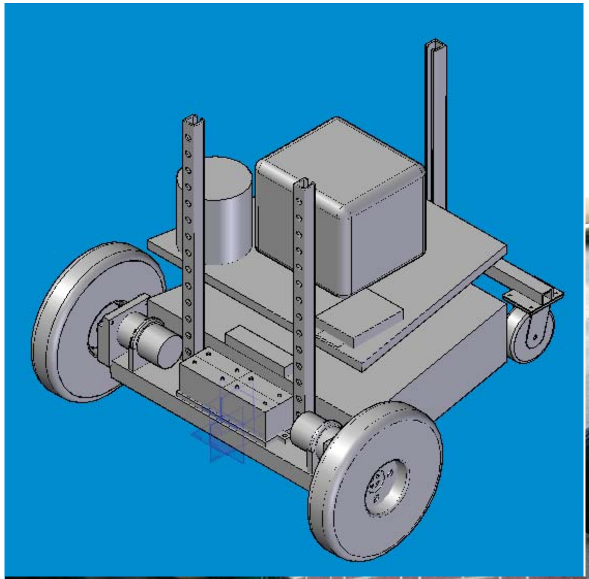

Hybrid battery/gas power generation system

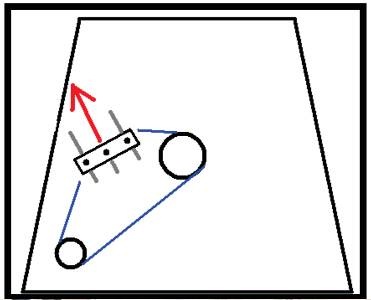

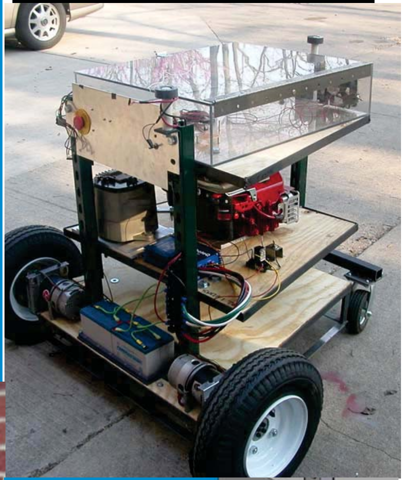

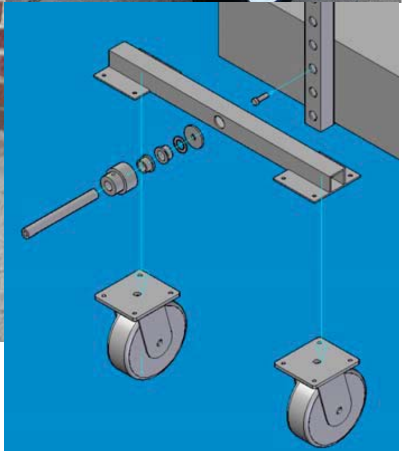

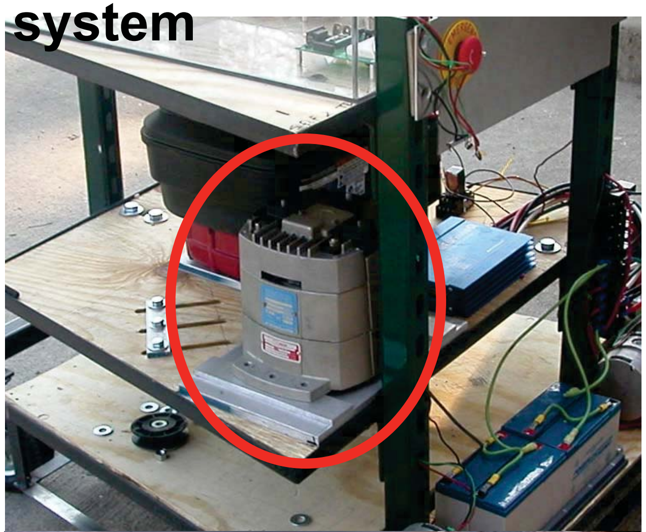

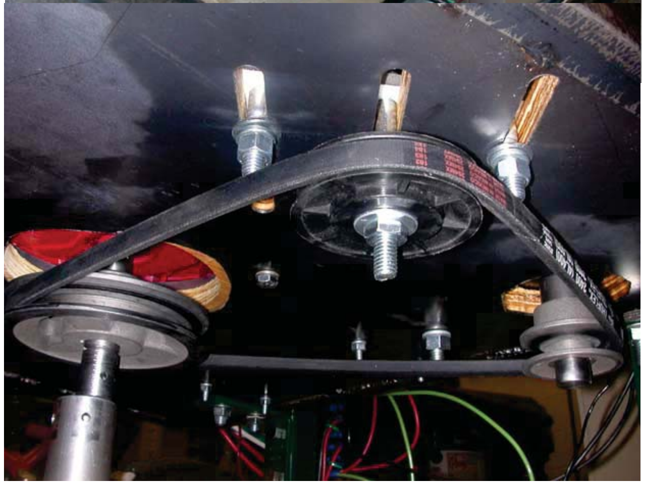

Multi-layered shelves
Electric motors

RedBlade II: New Electronics

- 2 on-board NovAtel Superstar II RX: mower heading
- Optical encoder
- Roboteq motor controller
- Systronix Saje Processor
- Programmed in Java
    - Multi-threaded execution, dynamic class loader

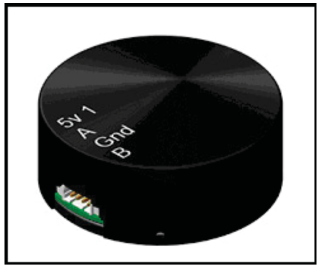

RedBlade III: Obstacle Avoidance

Sonar
(Parallax)

Range < 3m

Scanning Laser
(Sick)

Stereo Vision
(Unibrain)

Over a range of 12m,
the ranging error <5%.

RedBlade III: System Overview

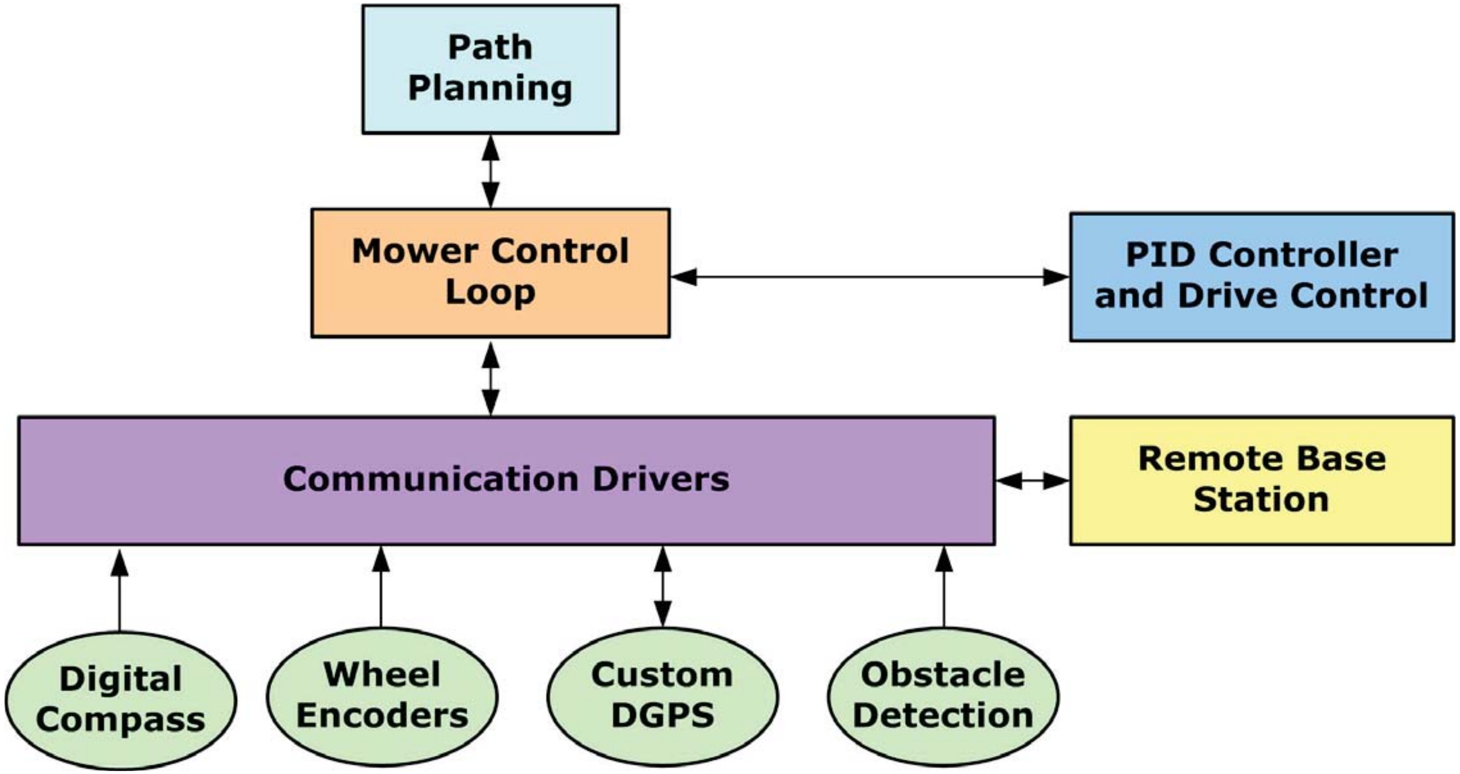

RedBlade III: Dynamic Path Planning

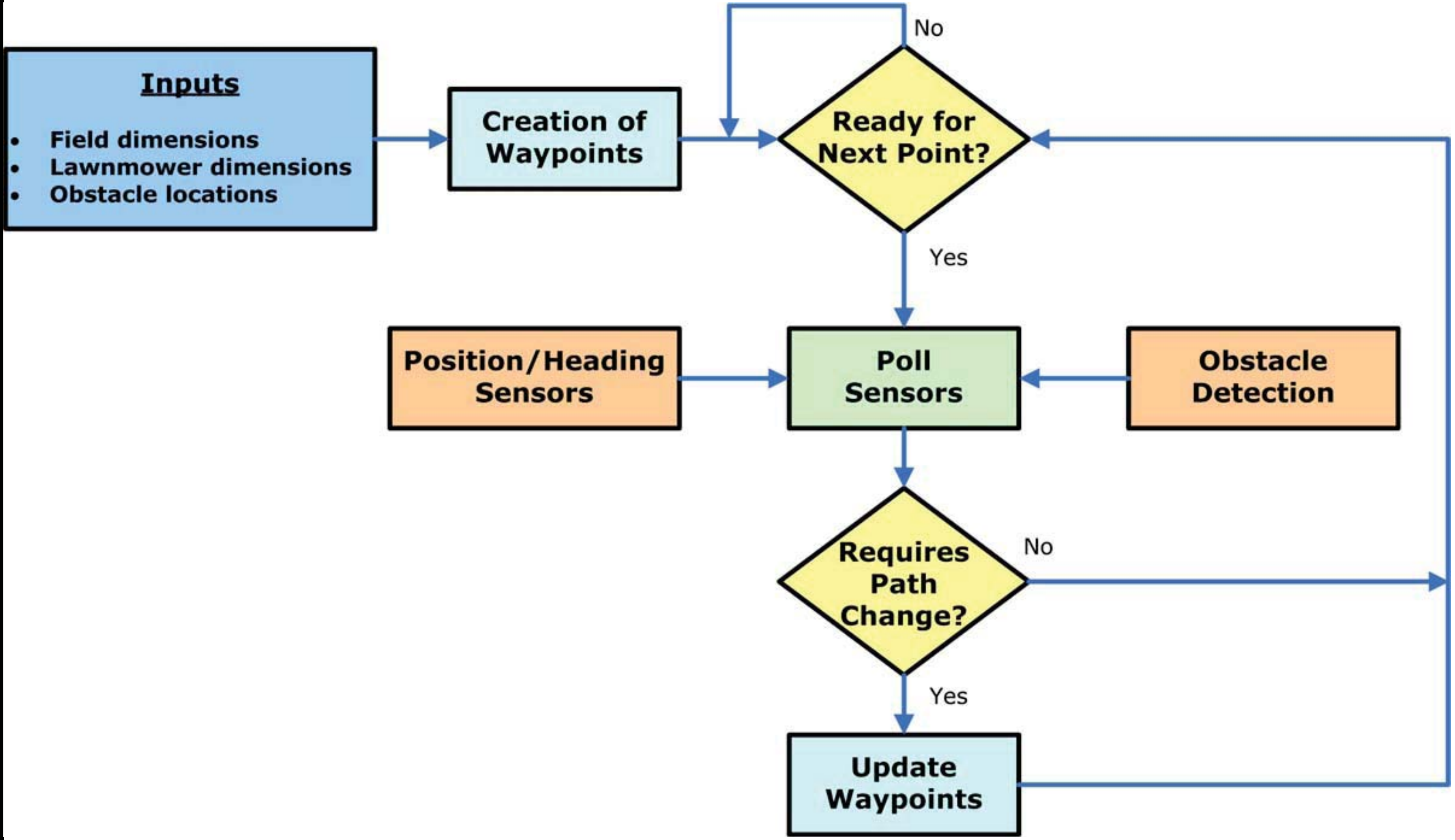

Inputs

- Field dimensions
- Lawnmower dimensions
- Obstacle locations

RedBlade III: An Example Path Layout

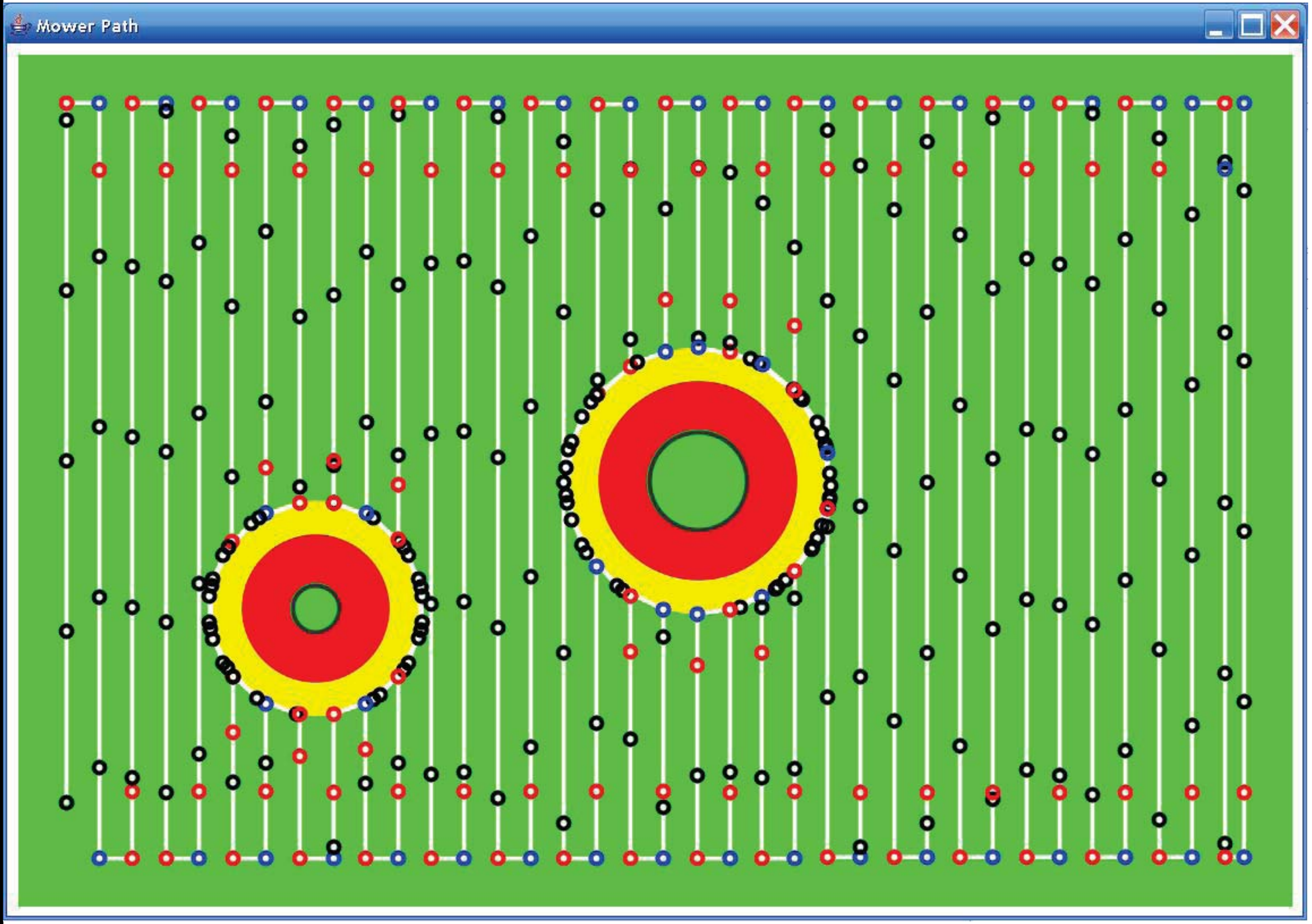

Final Two Days

←We left campus in this shape

….

Mechanical support problem

Laser problem

IMU problem

…….

Two days later…. →

RedBlade IV: Everything All Over Again…

New Platform

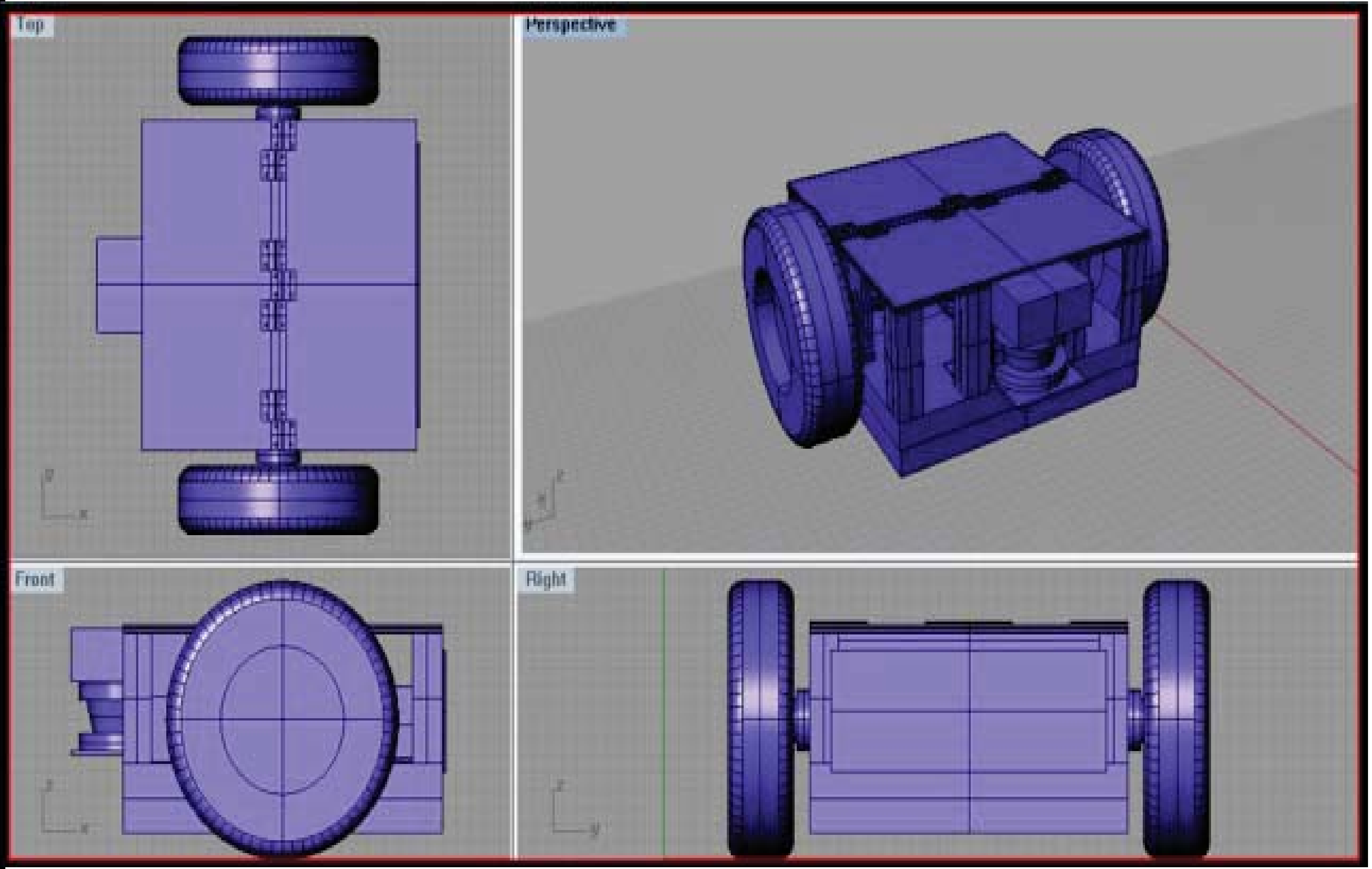

RedBlade IV: New Gadgets

- Introductions
- Overview
- **Autonomous GNC**
  - Basic Control
  - **ION Robotic Mower**
  - DARPA Challenge
- Lego® Mindstorms Intro
- Lego® Mindstorms Challenge

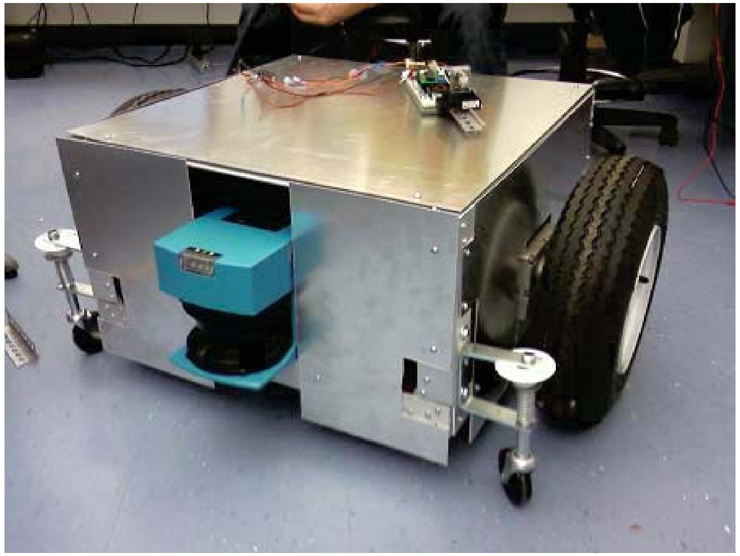

Topcon Hiper Lite+

IMU

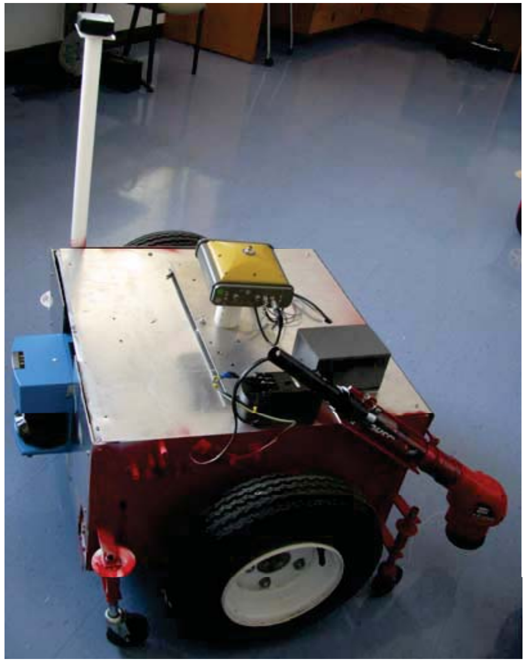

Edge Trimmer

RedBlade IV: New Control Algorithm

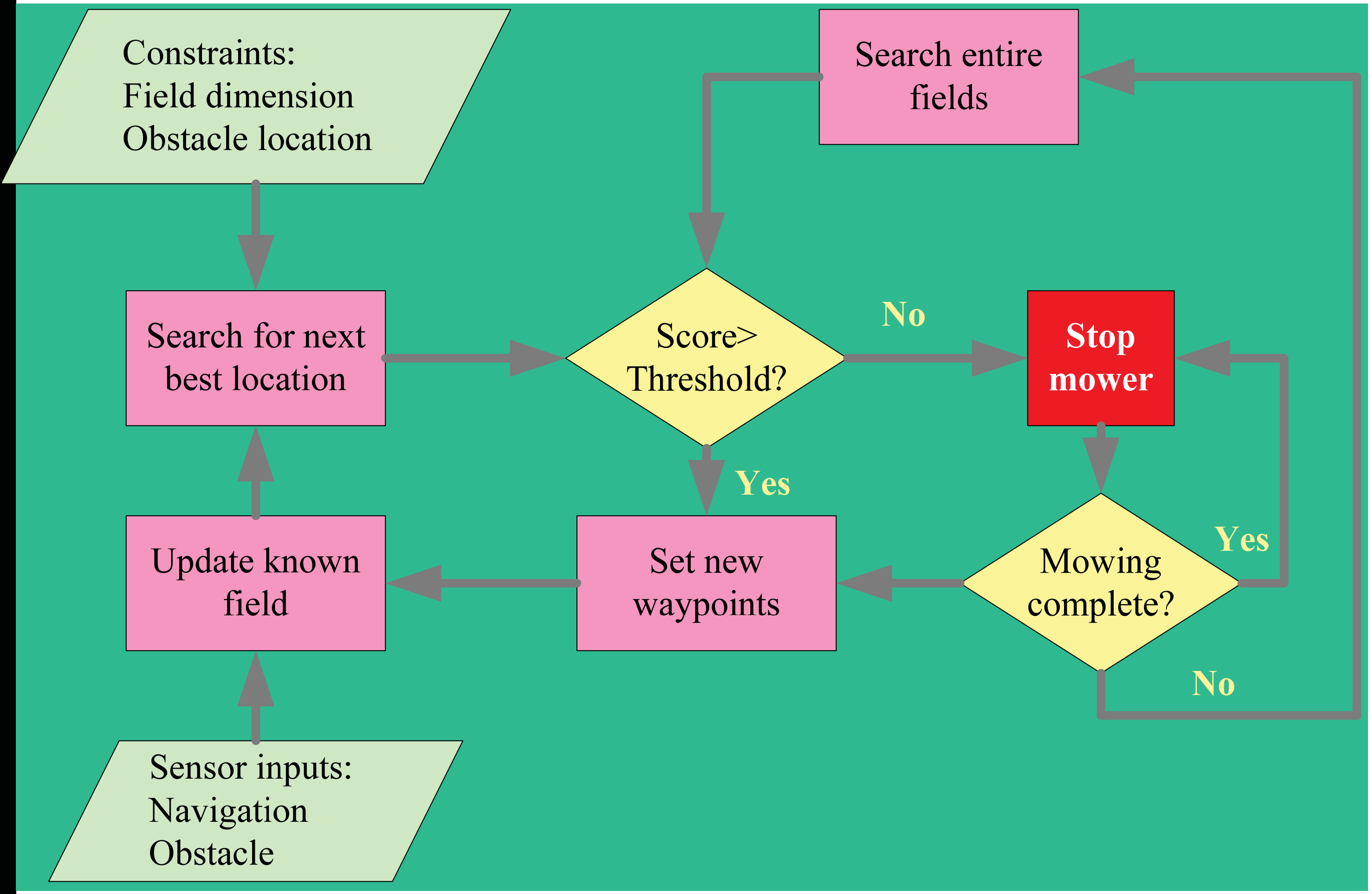

Constraints:
Field dimension
Obstacle location

Search entire fields

Search for next best location

Score> Threshold?

No

Stop mower

Yes

Update known field

Set new waypoints

Mowing complete?

Yes

No

Sensor inputs:
Navigation
Obstacle

RedBlade IV: Control Simulator

- Introductions
- Overview
- **Autonomous GNC**
  - Basic Control
  - **ION Robotic Mower**
  - DARPA Challenge
- Lego® Mindstorms Intro
- Lego® Mindstorms Challenge

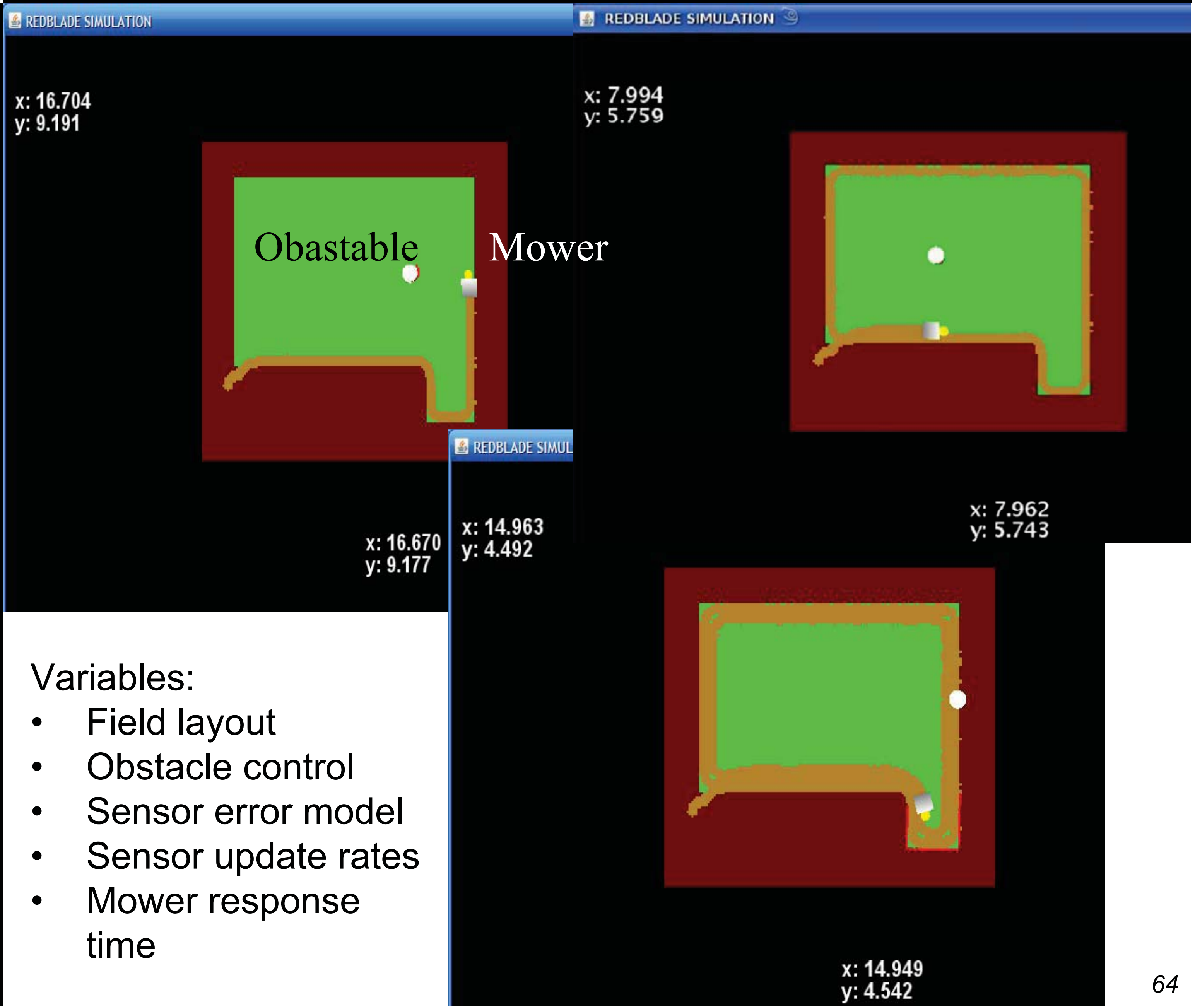

Variables:

- Field layout
- Obstacle control
- Sensor error model
- Sensor update rates
- Mower response time

It is raining, lightening, and thundering, but we are not ready yet….

Students/Faculty/Staff Involved

Students
Brett McNally
Micah Stutzman
Collin Koranda
Chris Mantz
Jeff Macasek
Scott Miller
Marcus French
John Russler
Jason Smith
Lauren Smith
Tom Walters
Kyle Green
Dan Anderson
Mike Lane
James Reynolds
Greg Newstadt

Faculty/Staff
Jade Morton
Scott Campbell
James Leonard
Mike McCollum
Jeff Peterson

Sponsors:
Snapper
NovAtel
Topcon
Outback Guidance and Control
Freewave Technologies
Parker Hannifin Corp.
Auto Zone
Honeywell
Miami University

Sample Designs from Competition

- Introductions
- Overview
- **Autonomous GNC**
  - Basic Control
  - **ION Robotic Mower**
  - DARPA Challenge
- Lego® Mindstorms Intro
- Lego® Mindstorms Challenge


CWRU

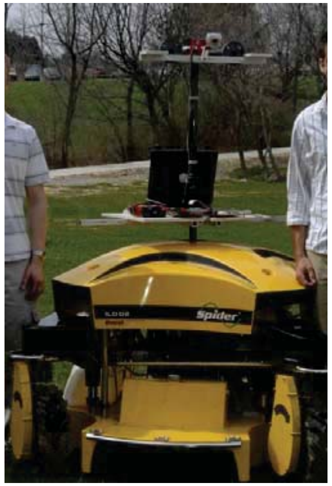
Cedarville


Ohio University


Florida State


University Evansville


University of Waterloo


Wright State University

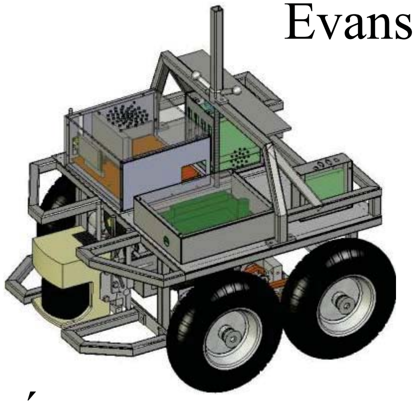
École de technologie supérieure

Autonomous Vehicle GNC

- Introductions
- Overview
- **Autonomous GNC**
  - Basic Control
  - ION Robotic Mower
  - DARPA Challenge
- Lego® Mindstorms Intro
- Lego® Mindstorms Challenge

- GNC issues for autonomous vehicles
  - Basic Control (Mikel - 30 minutes)
    - Sensors description
    - Outer Loop
    - Inner Loop
- ION Robotic Lawn Mower – (Jade - 1 hour)
  - Miami University's Approach
- **DARPA Urban Challenge (Casey - 1 hour)**
  - **DARPA Vehicles:**
    - **Carnegie Mellon '05 & '07**
    - **Stanford '05 & '07**
- **MUC – ION presentation**

DARPA Challenges

- Introductions
- Overview
- **Autonomous GNC**
  - Basic Control
  - ION Robotic Mower
  - **DARPA Challenge**
- Lego® Mindstorms Intro
- Lego® Mindstorms Challenge

Purpose

“The Grand and Urban Challenges were initiated to leverage American ingenuity to accelerate the research and development of autonomous ground vehicle technology, so it could be applied to military requirements and save American lives on the battlefield.”

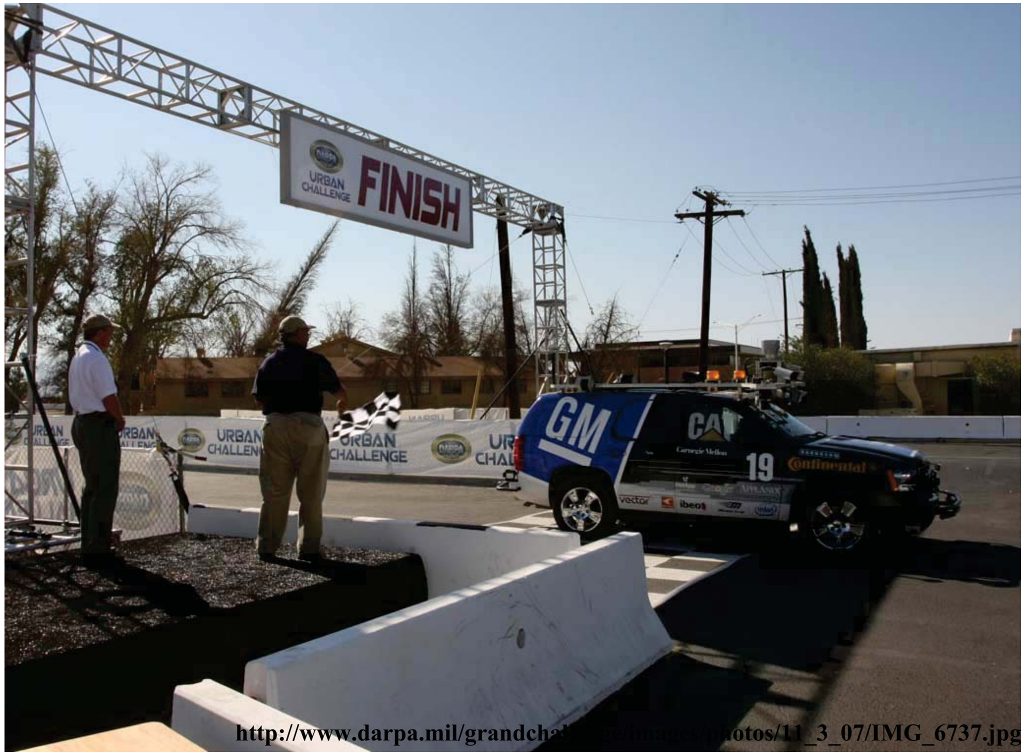

http://www.darpa.mil/grandchallenge/images/photos/11_3_07/IMG_6737.jpg

Route Network & Waypoints

- Introductions
- Overview
- **Autonomous GNC**
  - Basic Control
  - ION Robotic Mower
  - **DARPA Challenge**
- Lego® Mindstorms Intro
- Lego® Mindstorms Challenge

Route Network Definition File (RNDF)

- Lists thousands of waypoints along the course in accessible road segments

Mission Data File (MDF)

- Lists the sequence of checkpoints to be visited in order by the vehicle

Trip/Mission Planning

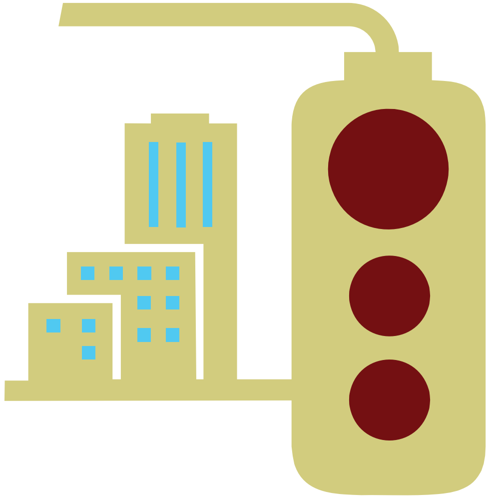

Trip/Mission Planning

GPS/INS provides us with…

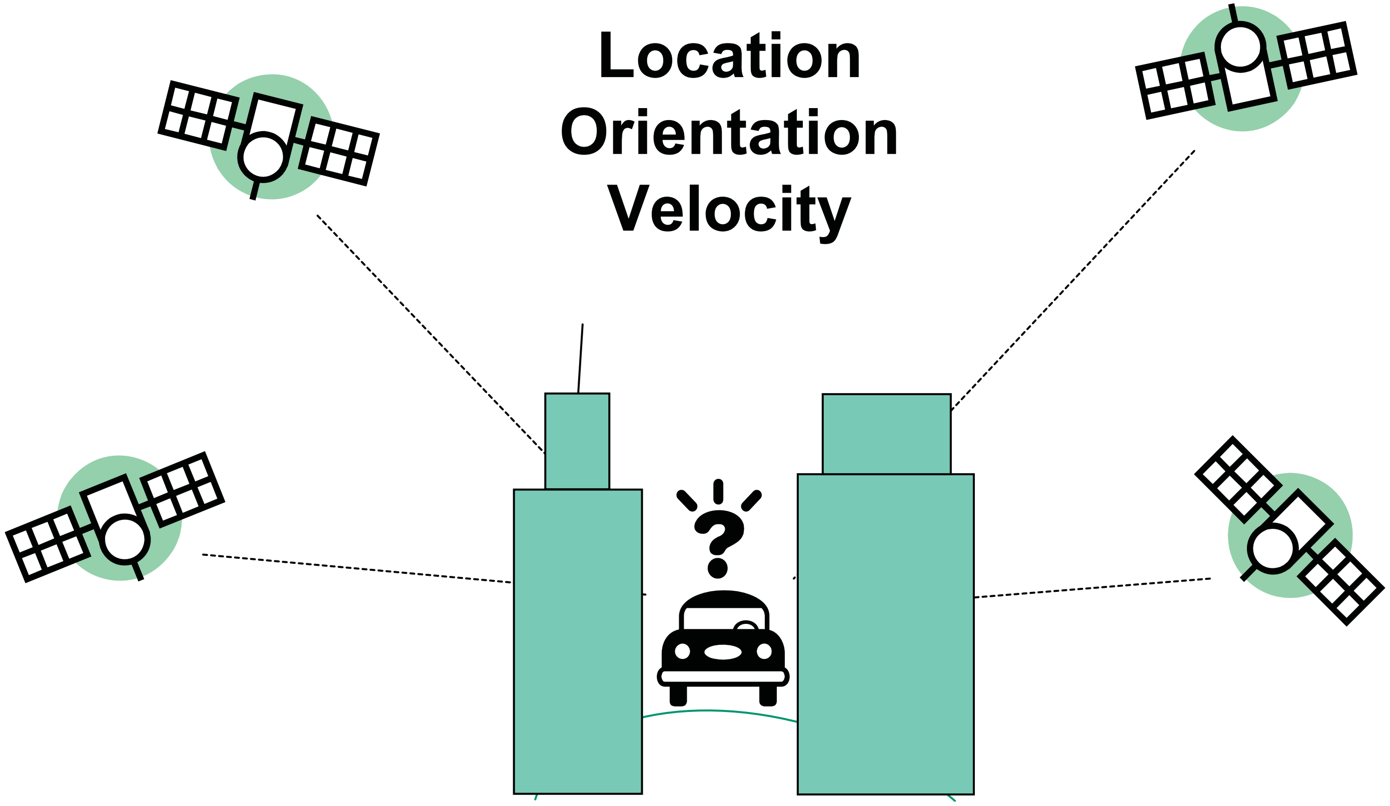

Location
Orientation
Velocity

Other sensors are necessary when the GPS signal is blocked

Driving Etiquette 101

Because our robot won't be the only car on the road, it needs to follow the same rules as everyone else:

- **Speed limits (GPS &/ wheel encoders)**
- **Staying in the correct lane (GPS & LIDAR)**
- **Intersections (GPS, LIDAR, Radar, Camera)**

These rules need to be absolute, otherwise people could get hurt or worse…

Sandstorm

Carnegie Mellon – Grand Challenge 2005

Sandstorm’s Sensors

Carnegie Mellon – Grand Challenge 2005

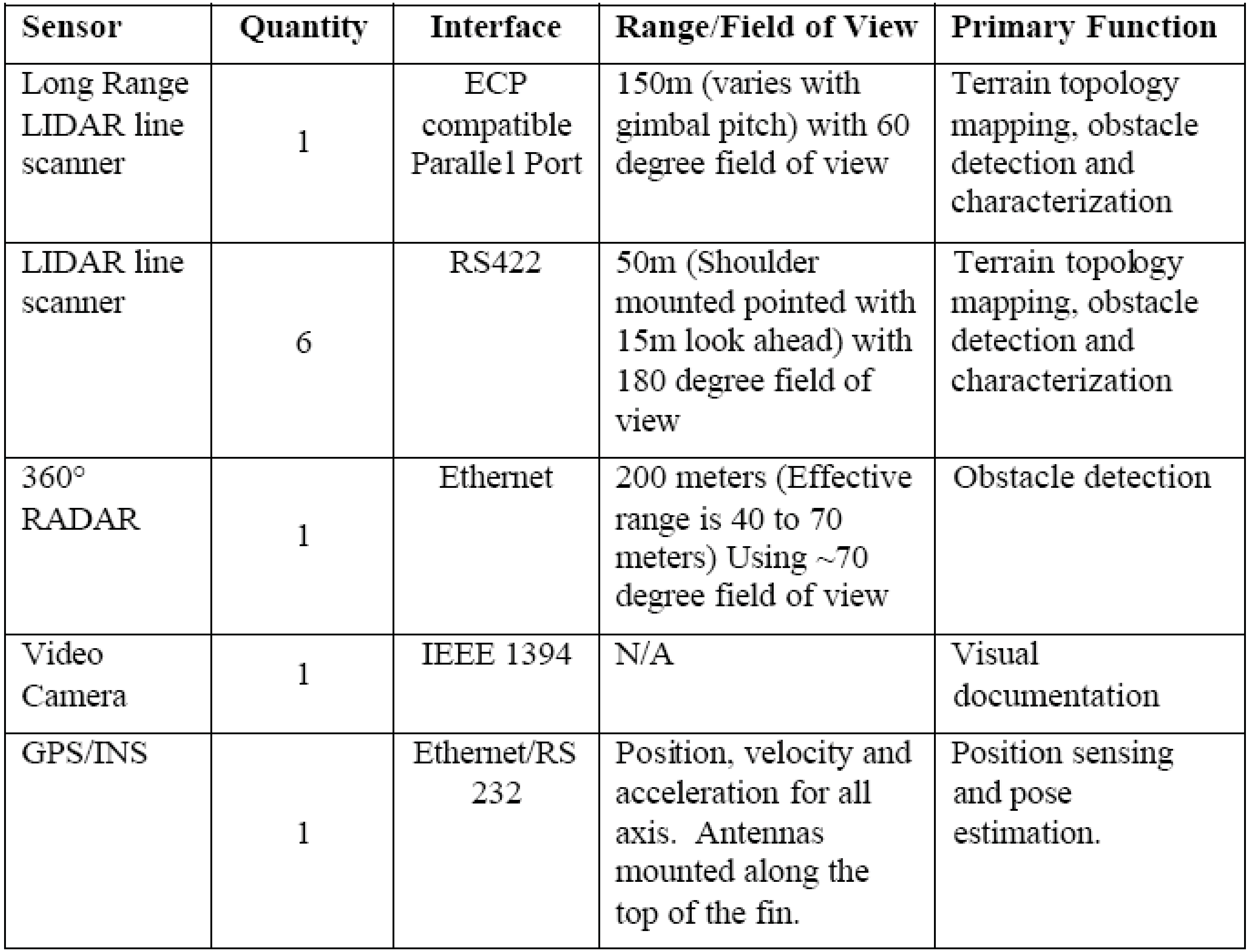

Sensor	Quantity	Interface	Range/Field of View	Primary Function
Long Range LIDAR line scanner	1	ECP compatible Parallel Port	150m (varies with gimbal pitch) with 60 degree field of view	Terrain topology mapping, obstacle detection and characterization
LIDAR line scanner	6	RS422	50m (Shoulder mounted pointed with 15m look ahead) with 180 degree field of view	Terrain topology mapping, obstacle detection and characterization
360° RADAR	1	Ethernet	200 meters (Effective range is 40 to 70 meters) Using ~70 degree field of view	Obstacle detection
Video Camera	1	IEEE 1394	N/A	Visual documentation
GPS/INS	1	Ethernet/RS 232	Position, velocity and acceleration for all axis. Antennas mounted along the top of the fin.	Position sensing and pose estimation.

Sandstorm

Carnegie Mellon – Grand Challenge 2005

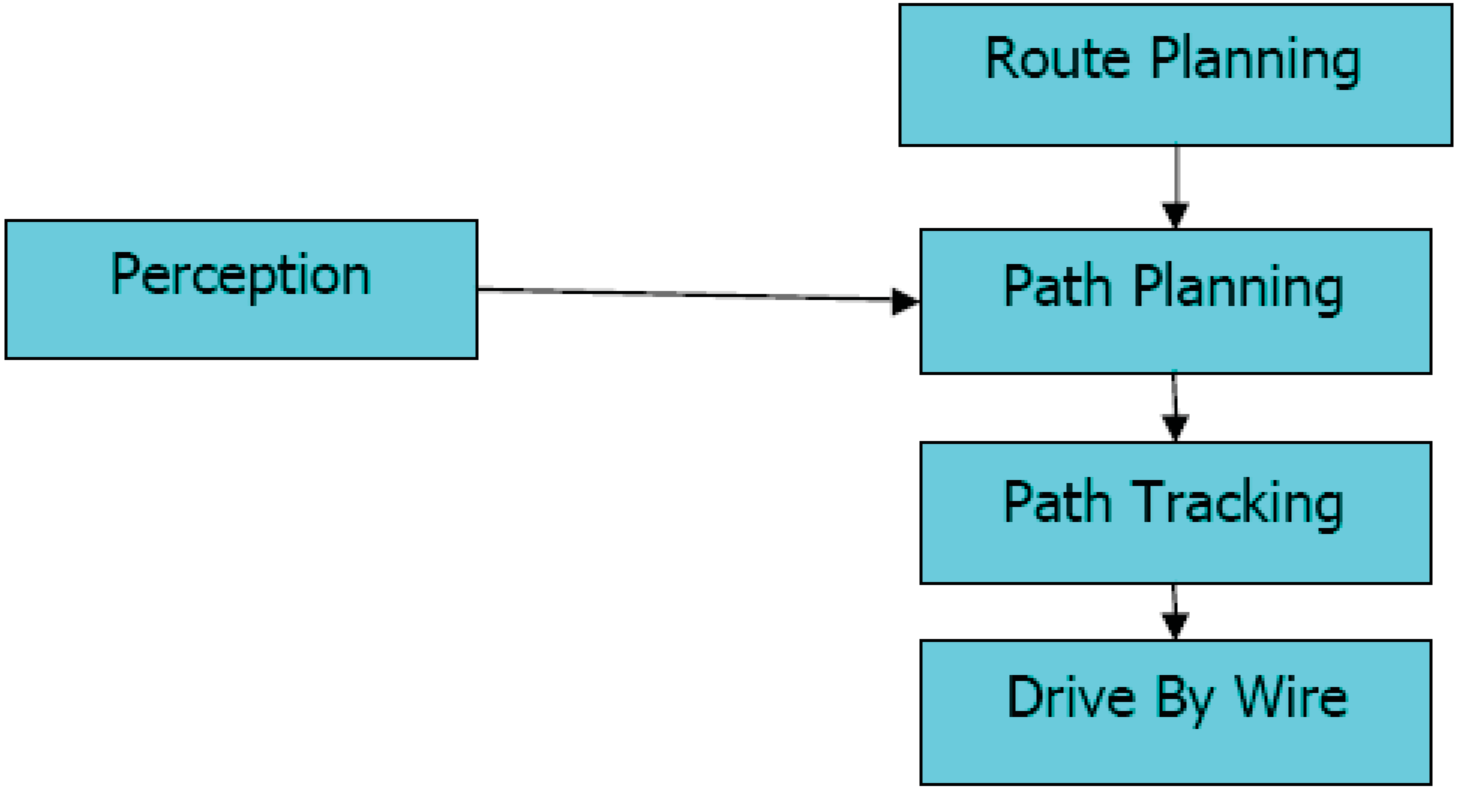

Sandstorm’s Sensor Field of View

Carnegie Mellon – Grand Challenge 2005

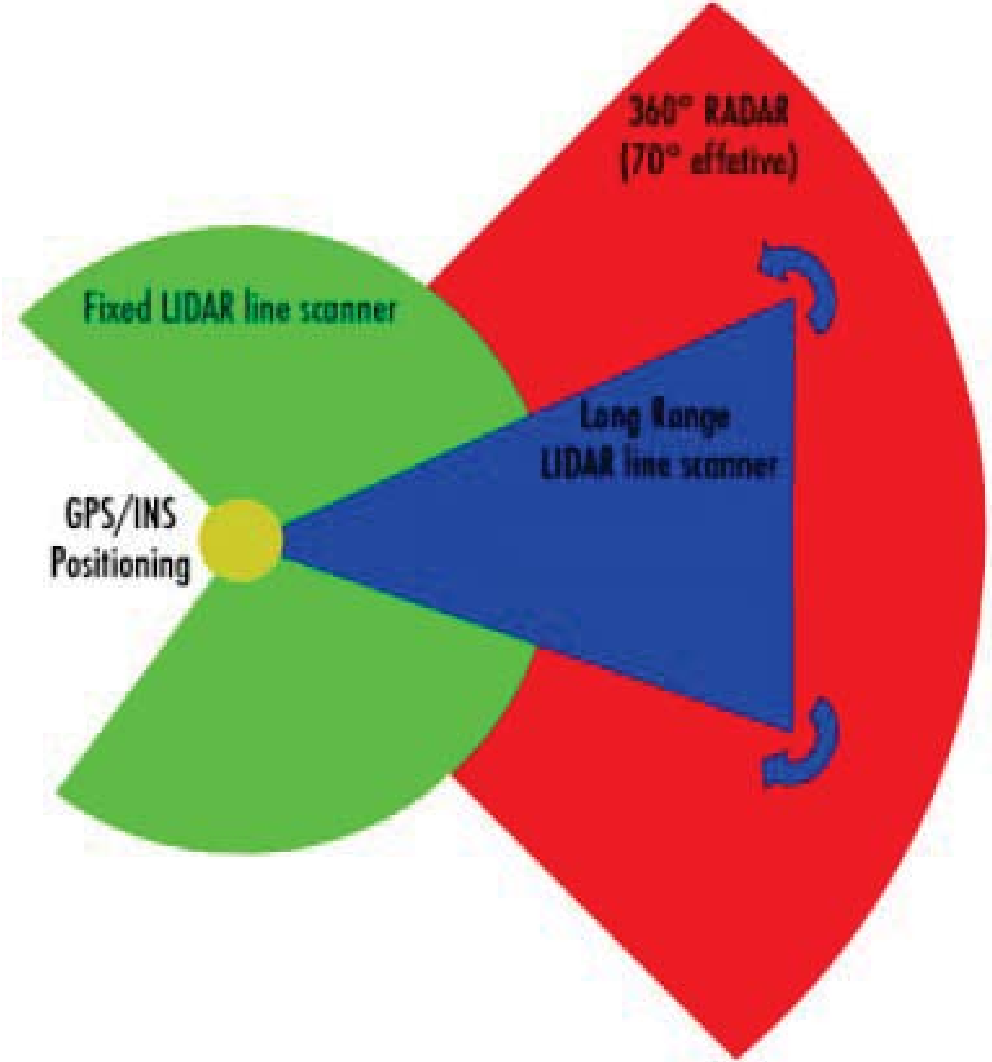

Boss

Road Navigation

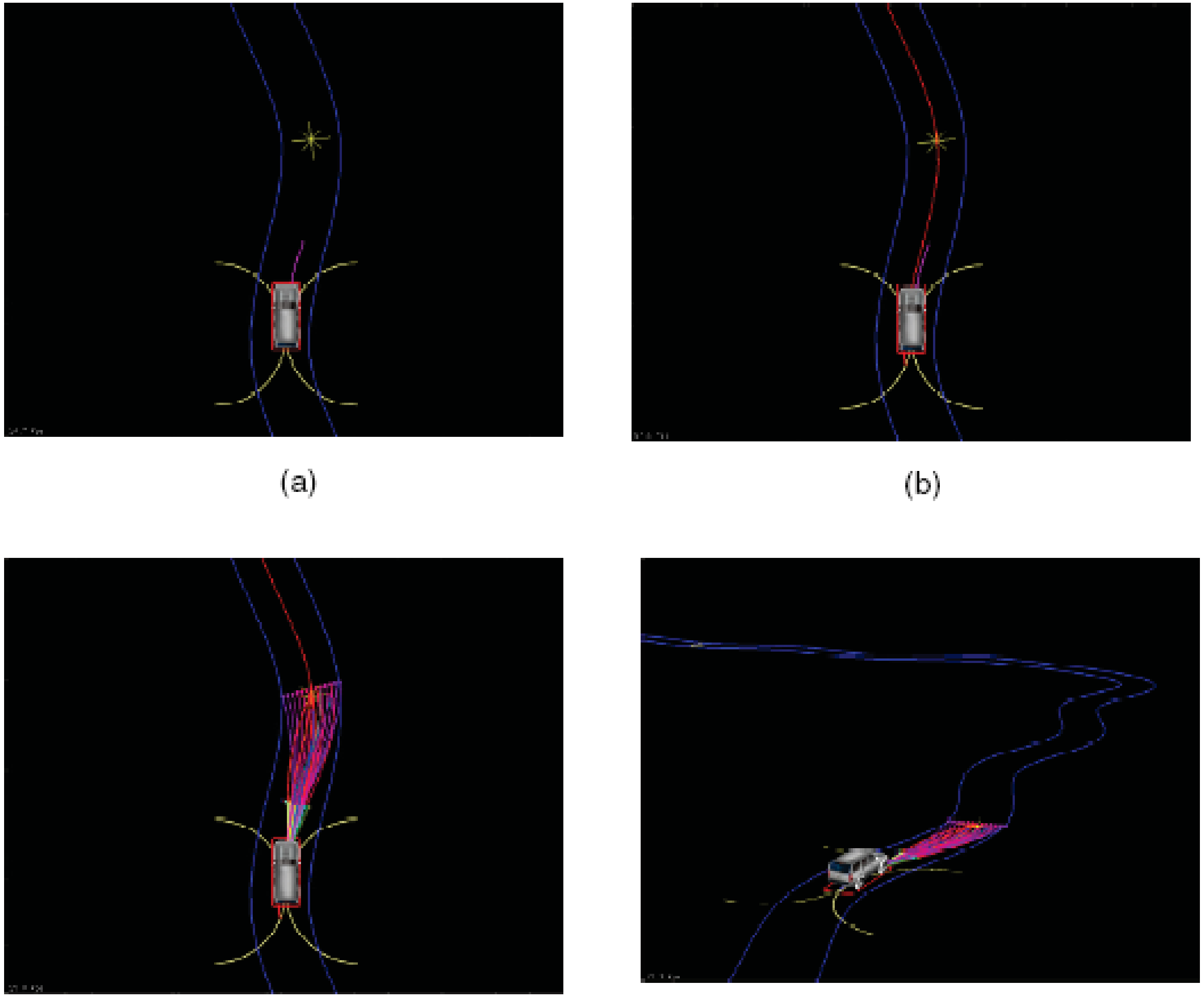

(a) (b)

(c) (d)

Boss

Intersection Navigation

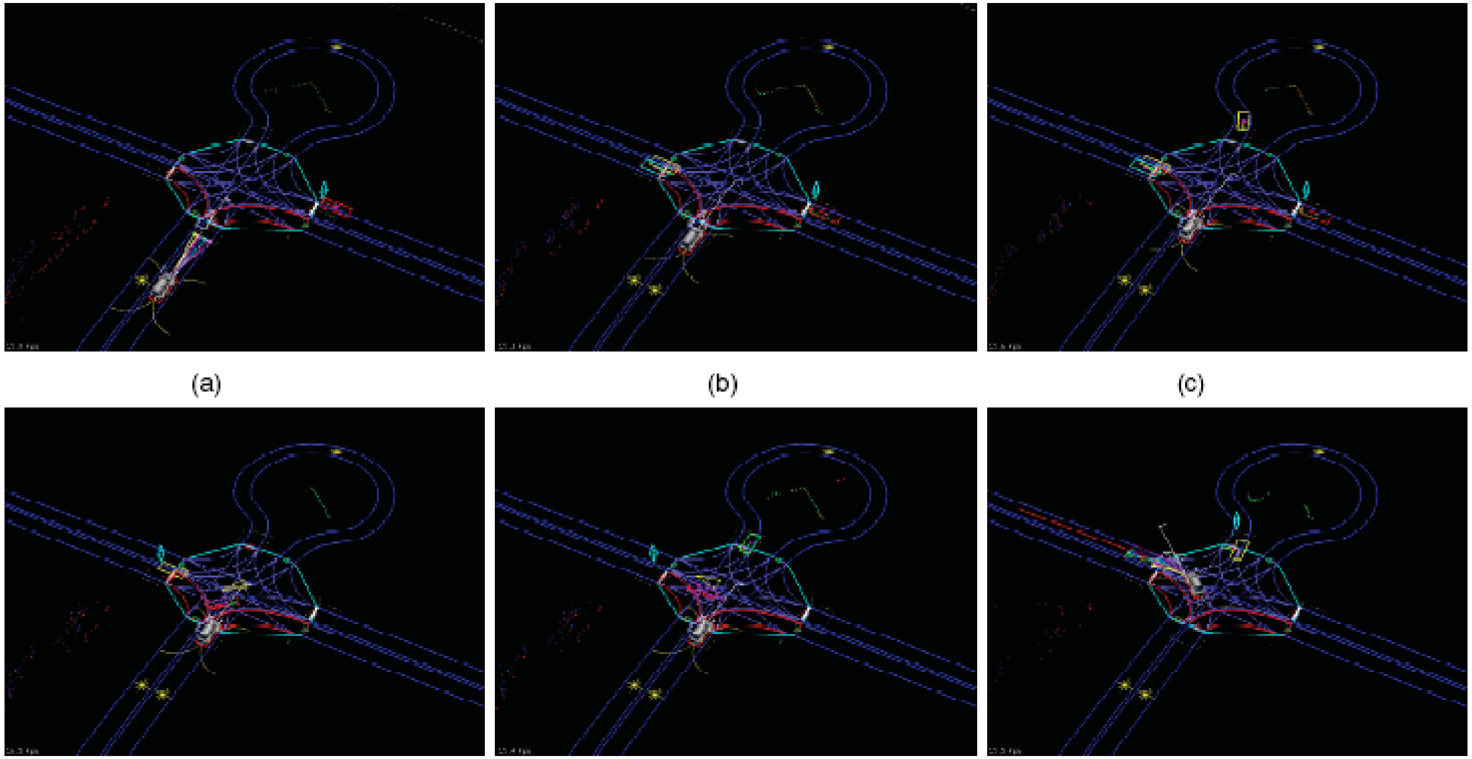

(a) (b) (c)

(d) (e) (f)

Boss

Sensor Roles

Role	Velodyne	SICK	Alaska XT	ISF 172	ARS 300	Ma/COM Radar	Mobileye	Camera
Determine safe to cross/merge at intersection	🟩	🟨	🟩	🟩	🟩			
Determine safe to pass in oncoming traffic	🟨	🟨	🟩	🟩	🟩			
Detection & localize vehicles for separation	🟩	🟩	🟩		🟩	🟩	🟩	
Estimate road shape and lane locations	🟩	🟩					🟩	🟩
Detection of static obstacles in the road	🟩	🟩	🟩					🟩

Stanley

Stanford – Grand Challenge 2005

Stanley's Sensors

Environmental Sensing

Laser

- Accurate, short-range perception (25m)
- Good for slow-motion
- Continually analyzed for obstacles

Radar

- Range data up to 200m
- Coarseness far inferior to laser

Vision

- Provides enhanced range relative to the laser
- No range data
- Classifies terrain based on texture & color

***Radar & Vision enable faster motion**

Junior

Stanford – Urban Challenge 2007

Junior’s Sensors

- Introductions
- Overview
- **Autonomous GNC**
  - Basic Control
  - ION Robotic Mower
  - **DARPA Challenge**
- Lego® Mindstorms Intro
- Lego® Mindstorms Challenge

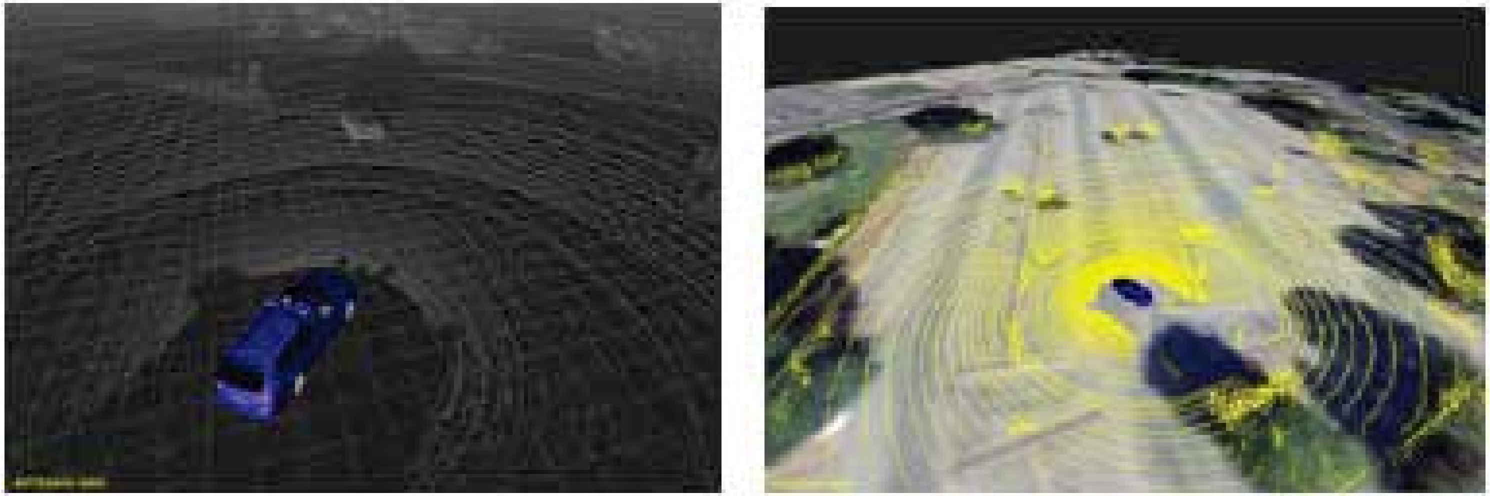

Velodyne LIDAR

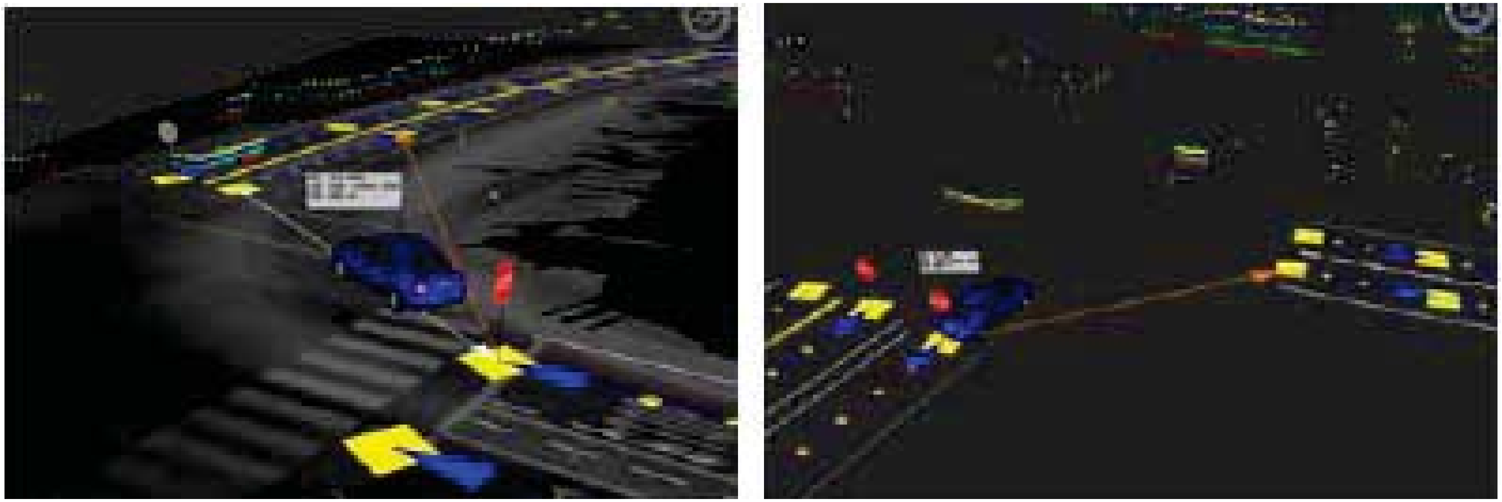

IBEO Range Scan

Junior's Sensors

- Introductions
- Overview
- **Autonomous GNC**
  - Basic Control
  - ION Robotic Mower
  - **DARPA Challenge**
- Lego® Mindstorms Intro
- Lego® Mindstorms Challenge

Ladybug by PointGray

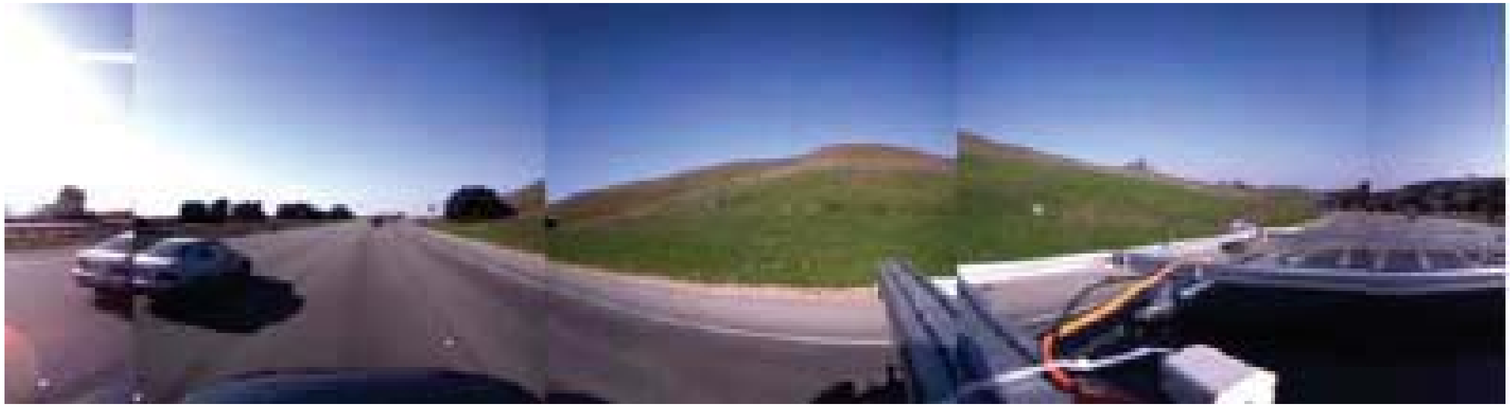

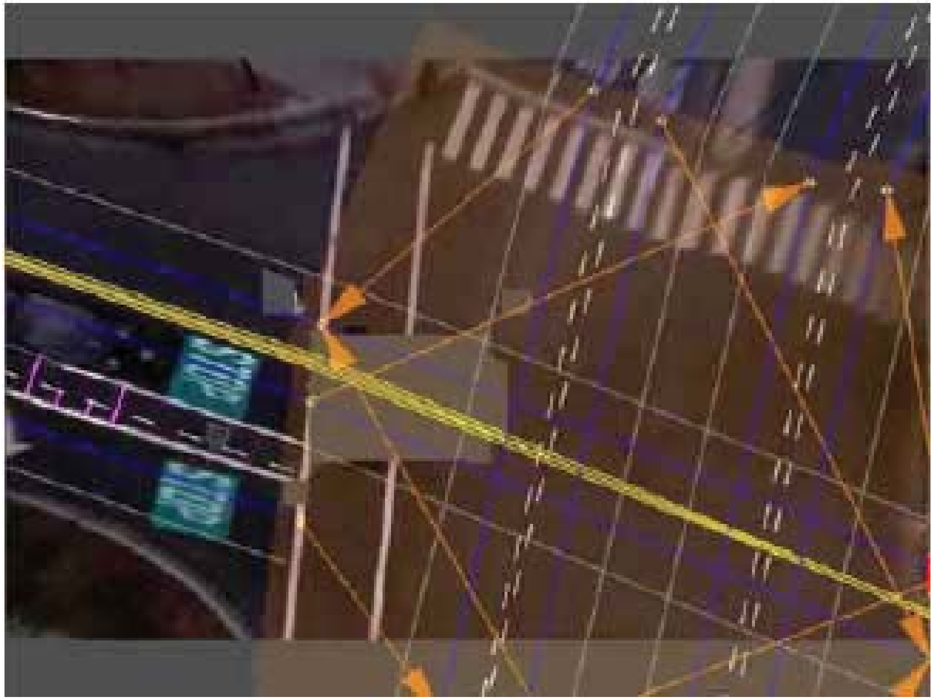

Bring it all together…

- Introductions
- Overview
- **Autonomous GNC**
  - Basic Control
  - ION Robotic Mower
  - **DARPA Challenge**
- Lego® Mindstorms Intro
- Lego® Mindstorms Challenge

Trip Planning with the RNDF takes care of basic calculating the initial route and route following…

While the sensors take care of keeping us on the road and making sure we don’t hit anyone!

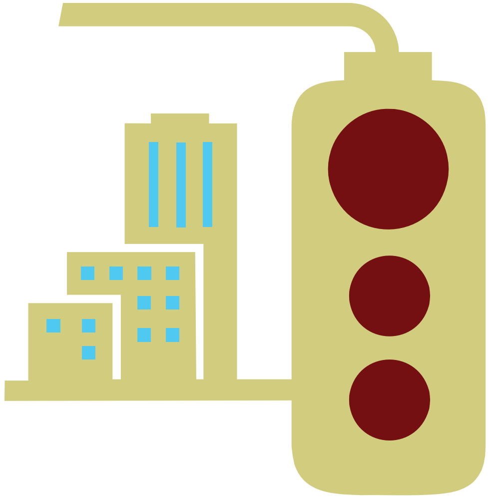

Mini-Urban Challenge

Purpose

The purpose of this competition is to challenge high school students to design and operate a robotic unmanned car built from a LEGO® MINDSTORMS® kit that can accurately navigate through a LEGO® city

Competition City Design

Mini-Urban Challenge

3 Components

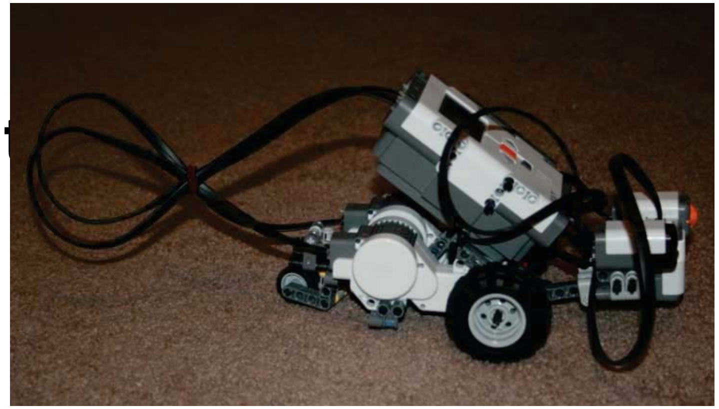

Construction

- Physically building t car

Sensors

- How are we going to get around safely?

Coding

- Labview
- C++

Mini-Urban Challenge

Basic LEGO® Mindstorms Sensors

- Introductions
- Overview
- Autonomous GNC
  - Basic Control
  - ION Robotic Mower
  - DARPA Challenge
- Lego® Mindstorms Intro
- Lego® Mindstorms Challenge

Touch -

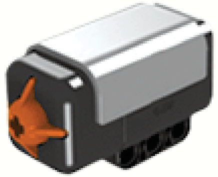

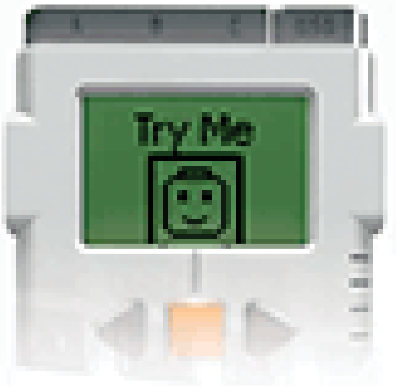

Black & White -

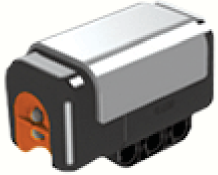

Sound -

Color -

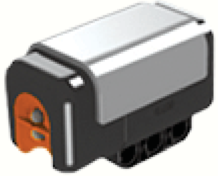

Ultrasonic -

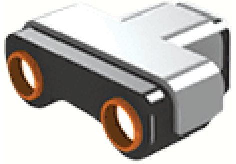

Servo -

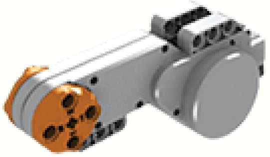

Mini-Urban Challenge

City Layout

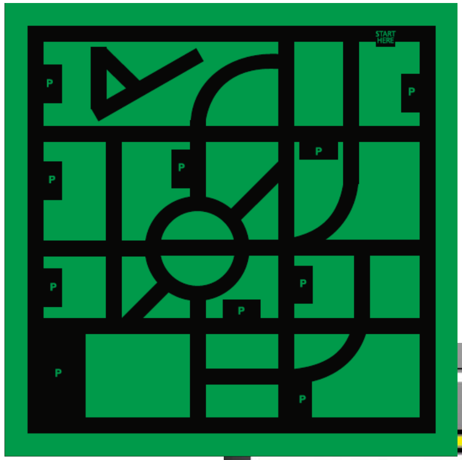

Intersection

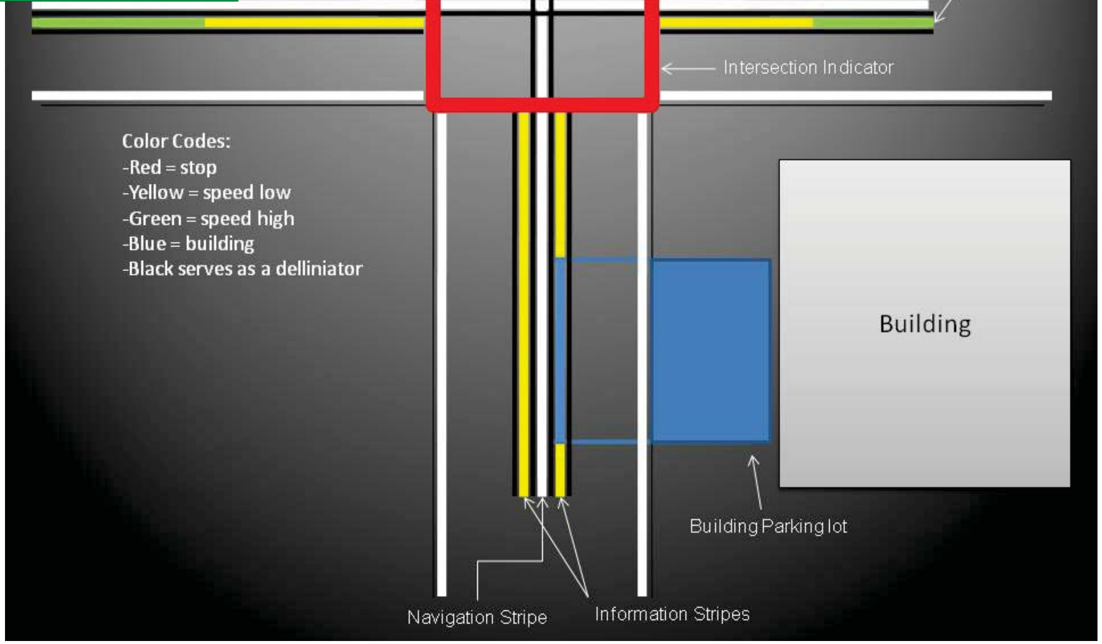

Color Codes:
-Red = stop
-Yellow = speed low
-Green = speed high
-Blue = building
-Black serves as a delliniator

Mini-Urban Challenge

Regional Competitions in mid-May

National Competition in late-May

Mini-Urban Challenge Sponsors

- The Institute of Navigation ($20K)
- AFRL Munitions Directorate ($30K)
  - PIA Established (up to $1M)
- Lockheed Martin ($5K)
- Garmin (donated GPS units)
- ArgonST ($2K)
- Calgary ($2K)
- Gavad ($2K)
- COUNT ($2K)
- Overlook Systems ($1K)
- LEGO® Company (10% discount)

Resources

- http://www.darpa.mil/grandchallenge/index.asp
- **Chris Urmson. 2007. "Tartan Racing: A Multi-Modal Approach to the DARPA Urban Challenge"**
- **Sebastian Thrun. 2007. "Stanford's Robotic Vehicle "Junior:" Interim Report"**
- **William Whittaker. 2005. "DARPA Grand Challenge 2005 Technical Paper"**
- **Stanford Racing Team. 2005. "Stanford Racing Team's Entry in the 2005 DARPA Grand Challenge"**
- **DARPA Urban Challenge. 2007. "RNDF and MDF Formats"**
- **http://www.miniurbanchallenge.com**

Overview

- Introductions
- Overview
- Autonomous GNC
- **Lego® Mindstorms Intro**
- Lego® Mindstorms Challenge

2:00 – 3:15: Lego® Mindstorms Kit (Jade)

- **Basic Kit introduction**
  - **Hardware components**
  - **Sensors**
- **Software:**
  - **Lego® Provided**
  - **Java (down load)**

3:15 – 3:30 – Break

3:30 – 5:30: Lego® MS Challenge – hands-on – (All)

- Challenge 1: Basic Line following
- Challenge 2: Use sonar for obstacle detection and avoidance

Lego® Mindstorms: Introduction

- A line of Lego sets combining
  - Microcontroller (programmable brick)
  - Motors, sensors, and Lego parts
- Invented by MIT Media Lab
- First released in 1998 as Robotics Invention System
  - 2 motors, 2 touch sensors, 1 light sensor

- Lego Mindstorm NXT, 2006
  - 3 servo motors, 4 sensors (touch, light, sound, ultrasonic)
- Software:
  - GUI-based programming software (NI LabVIEW as engine)
  - Third-party languages
    - leJOS: Java
    - RobotC
    - Interactive C
    - Visual Basic
    - ……

- Introductions
- Overview
- Autonomous GNC
- **Lego® Mindstorms Intro**
- Lego® Mindstorms Challenge

Lego® Mindstorms NXT: Basic Kit Introduction

NXT Intelligent Brick

Rechargeable lithium battery

Servo motors with built-in rotation sensors (3)

Light sensor

Touch sensors (2)

Sound sensor

Ultrasonic sensor

Connector cables
20cm(1), 50cm(2), 35cm(4)

NXT Software

- USB cable
- Charger
- Lego parts
- Wheels
- Gears
- Lamps
- ……

Converter cables (3)

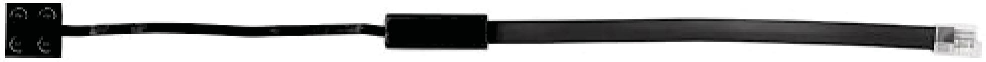

Lego® Mindstorms NXT: Additional Components

- Introductions
- Overview
- Autonomous GNC
- **Lego® Mindstorms Intro**
- Lego® Mindstorms Challenge

Acceleration

Color

Compass

Gyro

IR sensor

RFID

Temperature sensor

Bluetooth Dongle

Lego® Mindstorms NXT: Software Introduction

- Software development platform
- Sensor inputs
- Motor control
- Programming logic
- Putting them together

Lego® Mindstorms NXT: Development Platform

- Block-based graphical programming
- National Instrument LabVIEW engine
- 5 groups of built-in blocks
  - Action:
    - motor, sound, display, send message
  - Sensors:
    - touch, sound, light, ultrasonic, button, rotation, timer, receive message
  - Flow:
    - wait, loop, switch, stop
  - Data:
    - logic, math, compare, range, random, variable
  - Advanced:
    - text, number to text, keep alive, file access, calibrate, reset motor
- User-defined blocks
- Misc: starting point, sequence, download, run, help…

Lego® Mindstorms NXT: Help

- Introductions
- Overview
- Autonomous GNC
- **Lego® Mindstorms Intro**
- Lego® Mindstorms Challenge

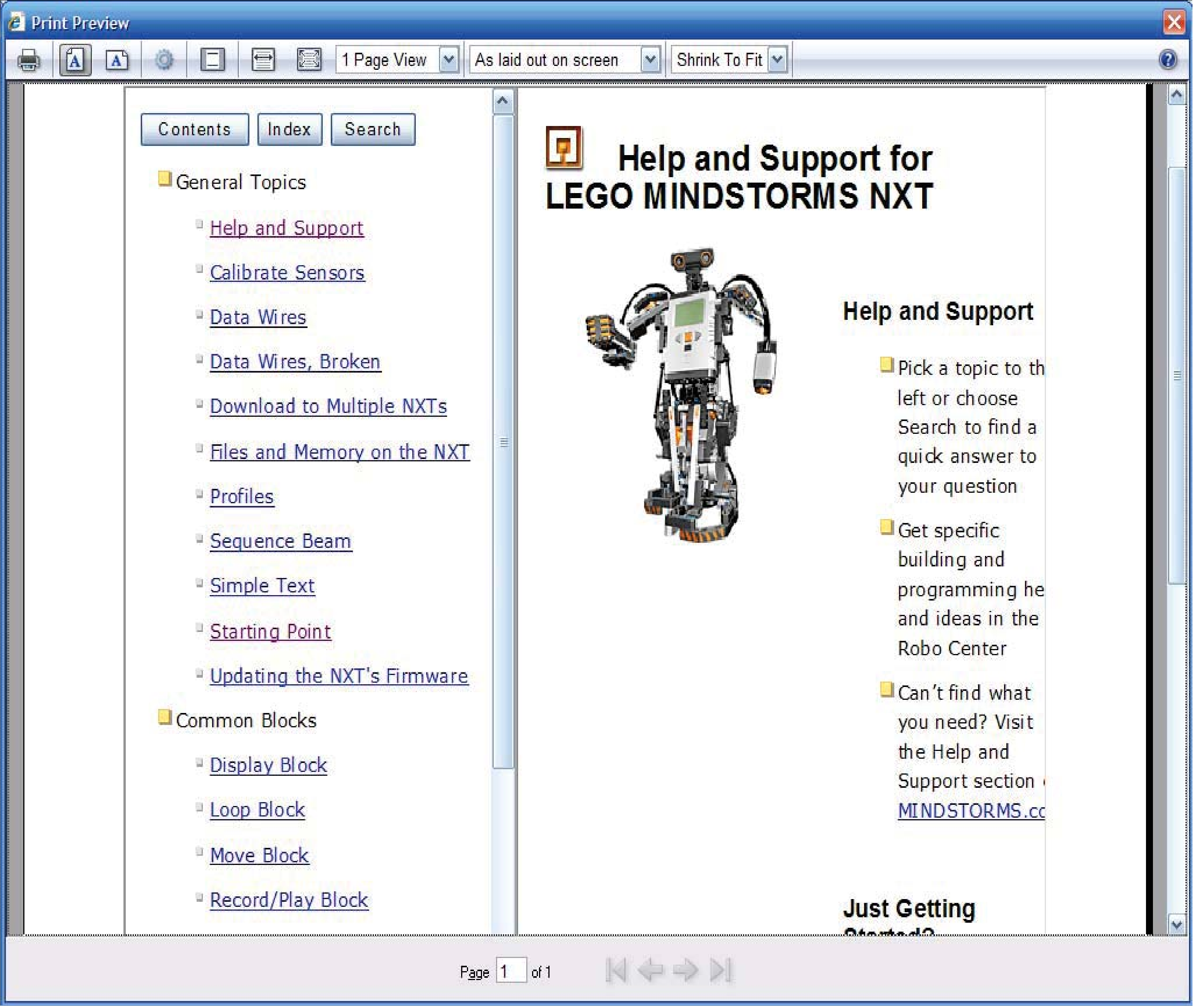

General Topics

- Help and Support
- Calibrate Sensors
- Data Wires
- Data Wires, Broken
- Download to Multiple NXTs
- Files and Memory on the NXT
- Profiles
- Sequence Beam
- Simple Text
- Starting Point
- Updating the NXT's Firmware

Common Blocks

- Display Block
- Loop Block
- Move Block
- Record/Play Block

Help and Support for LEGO MINDSTORMS NXT

Help and Support

- Pick a topic to th left or choose Search to find a quick answer to your question
- Get specific building and programming he and ideas in the Robo Center
- Can't find what you need? Visit the Help and Support section MINDSTORMS.cc

Just Getting Started?

Lego® Mindstorms NXT: Programming Demo

- Start a program
- Making sequences (multiple)
- Read sensor inputs
- Move block
- Data wires
- Compare block
- Switch block
- Loop block
- Custom blocks

Third Party Software: LeJOS

- A Java Virtual Machine
- Include all the classes (open sources) in NXJ API
- Include tools used to upload code to NXT
- Object oriented
- Can handle multi-dimensional array
- Can handle exceptions
- Can handle float, long, and string (block program can only handle integer!)
- Can use most java.lang, java.util, and java.io classes
- Lots, lots of classes and methods available
- Need to flash the NXT brick memory (nxjflash) with updated firmware (Java VM and leJOS NXJ)
- Visit: http://lejos.sourceforge.net/nxj.php

Overview

2:00 – 3:15: Lego® Mindstorms Kit (Jade)

- Basic Kit introduction
  - Hardware components
  - Sensors
- Software:
  - Lego® Provided
  - Java (down load)

3:15 – 3:30 – Break

3:30 – 5:30: Lego® MS Challenge – hands-on – (All)

- **Challenge 1: Basic Line following**
- **Challenge 2: Use sonar for obstacle detection and avoidance**