The Abdus Salam International Centre for Theoretical Physics

United Nations Educational, Scientific and Cultural Organization

IAEA International Atomic Energy Agency

2152-22

Joint ICTP-IAEA Course on Natural Circulation Phenomena and Passive Safety Systems in Advanced Water Cooled Reactors

17 - 21 May 2010

INTRODUCTION TO INSTABILITIES IN NATURAL CIRCULATION SYSTEMS

P.K. Vijayan

Reactor Engineering Division
Bhabha Atomic Research Centre Trombay
Mumbai
India

IAEA Training Course on Natural Circulation Phenomena and Passive Safety Systems in Advanced Water-Cooled Reactors, ICTP, Trieste, Italy, 17-21 May 2010

Lecture Notes for T-06

on

INTRODUCTION TO INSTABILITIES IN NATURAL CIRCULATION SYSTEMS

by

P.K. Vijayan and A.K. Nayak

Reactor Engineering Division, Bhabha Atomic Research Centre
Trombay, Mumbai-400085, INDIA

May 2010

INTRODUCTION TO INSTABILITIES IN NATURAL CIRCULATION SYSTEMS

P.K. Vijayan[1] and A.K. Nayak[2]
Reactor Engineering Division, Bhabha Atomic Research Centre, Trombay, Mumbai 400085, India

1: E-mail: vijayanp@barc.gov.in
2: E-mail: arunths@barc.gov.in

KEY WORDS

Natural circulation, static instability, dynamic instability, density wave instability, BWR instability, parallel channel instability

LECTURE OBJECTIVES

This lecture reviews the various natural circulation instabilities and their classification. The instabilities observed during various stages of natural circulation such as single-phase, boiling inception and fully developed two-phase flow are described. The mechanisms causing the instabilities are also briefly described.

1. INTRODUCTION

Natural circulation systems are susceptible to several kinds of instability. Although instabilities are common to both forced and natural circulation systems, the latter is inherently more unstable than forced circulation systems due to the nonlinear nature of the NC process and its low driving force. Because of the nonlinearity of the NC process, any disturbance in the driving force will affect the flow which in turn will influence the driving force leading to an oscillatory behaviour even in cases where eventually a steady state is expected. In other words, a regenerative feedback is inherent in the mechanism causing NC flow due to the strong coupling between the flow and the driving force. As a result, both single-phase and two-phase natural circulation systems exhibit instability where as only forced circulation two-phase systems are known to exhibit instability. Even among two-phase systems, the NC systems are more unstable than forced circulation systems due to the above reasons.

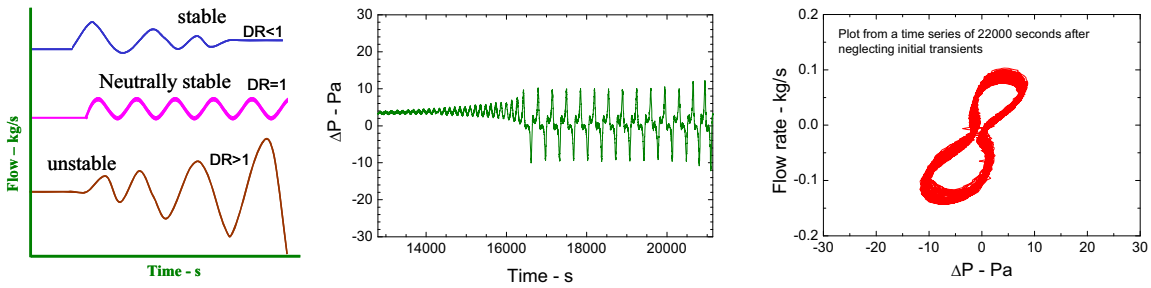

(a) Definition of instability *(b) Time series of instability* *(c) Limit cycle oscillations*

Fig. 1: Instability definition, time series and limit cycle oscillation

1.1 Instability and Limit Cycle Oscillations

Before we progress further, we need to define instability. Following a perturbation, if the system returns back to the original steady state, then the system is considered to be stable. If on the other hand the system continues to oscillate with the same amplitude, then the system is neutrally stable (Fig. 1a). If the system stabilizes to a new steady state or oscillates with increasing amplitude then the system is considered as unstable. It may be noted that the amplitude of oscillations cannot go on increasing indefinitely even for unstable flow. Instead for almost all cases of instability the amplitude is limited by nonlinearities of the system and limit cycle oscillations (which may be chaotic or periodic) are

eventually established. Examples of system nonlinearities are neutron flux cannot be negative and void fraction can vary only between zero and unity. The time series (Fig. 1b) of the limit cycle oscillations (Fig. 1c) may exhibit characteristics similar to the neutrally stable condition. Further, even in steady state case, especially for two-phase systems with slug flow, small amplitude oscillations are visible. Thus, for identification purposes especially during experiments, often it becomes necessary to quantify the amplitude of oscillations as a certain percentage of the steady state value. Amplitudes more than $\pm$ 10% of the mean value is often considered as an indication of instability. However, some authors recommend the use of $\pm$ 30% as the cut-off value (Mochizuki (1994)).

1.2 Disadvantages of Instability

Instability is undesirable as sustained flow oscillations may cause forced mechanical vibration of components. Further, premature CHF (critical heat flux) occurrence can be induced by flow oscillations as well as other undesirable secondary effects like power oscillations in BWRs. Instability can also disturb control systems and pause operational problems in nuclear reactors.

Over the years, several kinds of instabilities have been observed in natural circulation systems excited by different mechanisms. Differences also exist in the transport mechanism, oscillatory mode, the nature of the instability threshold and its prediction methods. In addition, effects of loop geometry and secondary phenomena also cause complications in the observed instabilities. Under the circumstances, it looks relevant to classify instabilities into various categories which will help in improving our understanding and hence control of these instabilities.

2. INSTABILITY CLASSIFICATION

Mathematically, the fundamental cause of all instabilities is due to the existence of competing multiple solutions so that the system is not able to settle down to any one of them permanently. Instead, the system swings from one solution to the other. An essential characteristic of the unstable oscillating NC systems is that as it tries to settle down to one of the solutions a self-generated feedback appears making another solution more attractive causing the system to swing towards it. Again during the process of settling down on this solution, another feedback of opposite sign favoring the original solution is self-generated and the system swings back to it. The process repeats itself resulting in perpetual oscillatory behaviour if the operating conditions are maintained constant. Although this is a general characteristic it hardly distinguishes the different types of instabilities found to occur in various systems. In general, instabilities can be classified according to various bases as listed below:

a) analysis method,
b) propagation method,
c) number of unstable zones,
d) nature of the oscillations,
e) loop geometry and
f) disturbances or perturbations

2.1. Based on the Analysis Method (or Governing Equations Used)

In some cases, the occurrence of multiple solutions and the instability threshold itself can be predicted from the steady state equations governing the process (pure or fundamental static instability). However, there are many situations with multiple steady state solutions where the threshold of instability cannot be predicted from the steady state laws alone (or the predicted threshold is modified by other effects). In this case, the cause of the instability lies in the steady state laws but feedback effects are important in predicting the threshold (compound static instability). Besides, many NCSs with only a unique steady state solution can also become unstable during the approach to the steady state due to the appearance of competing multiple solutions due to the inertia and feedback effects (pure dynamic instability). Neither the cause nor the threshold of instability of such systems can be

predicted purely from the steady state equations alone. Instead, it requires the full transient governing equations to be considered for explaining the cause and predicting the threshold. In addition, in many oscillatory conditions, secondary phenomena gets excited and it modifies significantly the characteristics of the fundamental instability. In such cases, even the prediction of the instability threshold may require consideration of the secondary effect (compound dynamic instability). A typical case is the neutronics responding to the void fluctuations resulting in both flow and power oscillations in a BWR. In this case, in addition to the equations governing the thermalhydraulics, the equations for the neutron kinetics and fuel thermal response also need to be considered.

Thus we find that the analysis to arrive at the instability threshold can be based on different sets of governing equations for different instabilities. Based on the governing equations used to predict the threshold Boure, Bergles and Tong (1973) classified instabilities into four basic types as:

a) Pure static instability,
b) Compound static instability[1],
c) Pure dynamic instability and
d) Compound dynamic instability.

2.2. Based on the propagation method

This classification is actually restricted to only the dynamic instabilities. According to Boure et al. (1973) the mechanism of dynamic instability involves the propagation or transport of disturbances. In two-phase flow, the disturbances can be transported by two different kinds of waves: pressure (acoustic waves) and void (or density) waves. In single-phase NCSs, however, only density wave instability is observed. In any two-phase system both types of waves are present, however, their velocities differ by one or two orders of magnitude allowing us to distinguish between the two.

2.2.1. Acoustic Instability

Acoustic instability is considered to be caused by the resonance of pressure waves. Acoustic oscillations are also observed during blowdown experiments with pressurized hot water systems possibly due to multiple wave reflections. Acoustic oscillations are characterized by high frequencies of the order of 10-100 Hz related to the pressure wave propagation time (Boure et al. (1973)). Acoustic oscillations have been observed in subcooled boiling, bulk boiling, and film boiling. The thermal response of the vapor film to passing pressure wave is suggested as a mechanism for the oscillations during film boiling. For example, when a compression (pressure wave consists of compression and rarefaction) wave passes the vapor film is compressed enhancing its thermal conductance resulting in increased vapor generation. On the other hand when a rarefaction wave passes, the vapor film expands reducing its thermal conductance resulting in decreased vapor generation. The process repeats itself.

2.2.2. Density wave instability (DWI)

In a boiling system a temporary increase in the power causes a fluid packet of high void fraction and hence low density (i.e. a light fluid packet) to emerge from the heat source. As this light fluid packet moves up along the riser it increases the driving force and hence the flow. The increased flow reduces the exit enthalpy and the void fraction causing a fluid packet of high density (dense or heavy fluid packet) to emerge from the heat source. As the heavy fluid packet ascends along the riser, the driving force reduces causing the flow rate to decrease. This decrease in flow rate again increases the exit enthalpy and void fraction leading to the repetition of the process. It must be clearly understood that the above mechanism is at work in a NCS always. Instability, however, is observed only when the light and heavy fluid packets are formed with appropriate spacing (related to time delay) and

[1] It may be noted that Boure, Bergles and Tong (1973) named this instability as compound relaxation instability.

magnitude, which are dependent on the operating conditions as well as the loop geometry. The instability is also observable in condensing as well as single-phase NCSs. In fact, DWI is the most commonly observed instability in natural circulation loops. The basic difference with acoustic instability is that the DWI is characterized by low frequency oscillations (of the order of 1 Hz).

Because of the importance of void fraction and its effect on the flow as explained above this instability is sometimes referred to as flow-void feedback instability in two-phase systems. Since transportation time delays (related to the spacing between the light and heavy packets of fluid as explained above) are crucial to this instability, it is also known as "time delay oscillations". In single-phase, near critical and supercritical systems the instability is also known as thermally induced oscillations (Welander (1957) and Zuber (1966)). However, Density Wave Instability (DWI) or density wave oscillations (DWO), first used by Stenning and Veziroglu (1965), is the most common term used for the above described phenomenon as it appears that a density wave with light and heavy fluid packets is traveling through the loop.

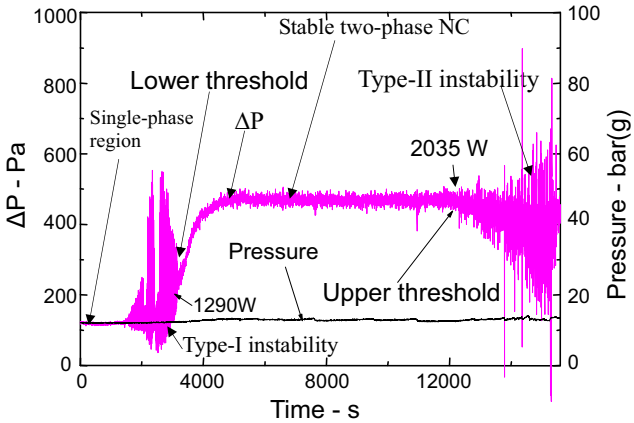

FIG. 2a. Typical low power and high power unstable zones for two-phase NC flow

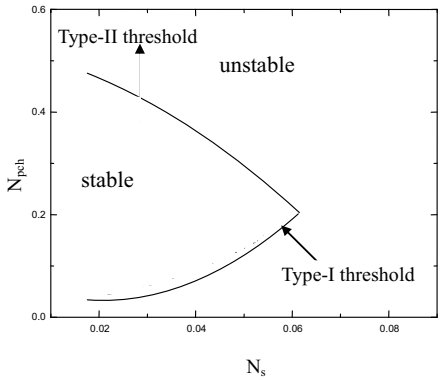

FIG.. 2b. Typical stability map for two-phase density wave instability

2.3. Based on the number of unstable zones

Fukuda and Kobori (1979) gave a further classification of density wave instability based on the number of unstable zones. Usually, there exists a low power and a high power unstable zone for density wave instability in two-phase NC flows (Fig. 2a). For the two-phase flow density wave instability, the unstable region below the lower threshold occurs at a low power and hence at low quality and is named as type I instability by Fukuda and Kobori (1979). Similarly, the unstable region beyond the upper threshold occurs at a high power and hence at high qualities and is named as type II instability. Theoretical analysis by the same authors has shown that the gravitational pressure drop in the unheated riser section plays a dominant role in type I instability where as frictional pressure drop is dominant in type II instability. Generally, if the stability map encloses the unstable region, then it has only one unstable zone (Fig. 3a and b). On the other hand if it encloses the stable zone, then it has two unstable zones (Fig. 2b). If the stability map is like that shown in Fig. 3c, then it is possible to get two unstable zones and three stable zones for certain operating conditions. Islands of instability have been observed to occur by Yadigaroglu and Bergles (1969) within the stable operating region. Further recent theoretical investigations confirm the existence of islands of instability in stable zones (Achard et al. (1985)) and islands of stability in unstable zones (Ambrosini et al. (2004)) in which case there are more than two zones of instability. Similarly Nayak et al. (2003) has shown that more than two thresholds exist for flow pattern transition instability. Experiments by Vijayan et al. (2001) have shown that even the lower instability threshold for density wave instability in single-phase NC flow can be different for different operating procedures due to the hysteresis phenomenon. Chen et al. (2001) also observed hysteresis in a two-phase loop. As an unstable single-phase system progresses through single-phase NC to boiling inception to fully developed two-phase NC with power change, it

can encounter several unstable zones. In view of the existence of more than two unstable zones, this method of classification could be confusing at times.

2.4. Based on the nature of the oscillations

All instabilities eventually lead to some kind of oscillations. The oscillations can be labeled as flow excursion, pressure drop oscillation, power oscillation, temperature excursion, etc. Besides, classifications based on the oscillatory characteristics are some times reported for dynamic instability. For example, based on the periodicity sometimes oscillations are characterized as periodic and chaotic. Based on the oscillatory mode, the oscillations are characterized as fundamental mode or higher harmonic modes. Depending on the phase lag we can classify oscillations as in-phase, out-of-phase or if both in-phase and out-of-phase modes are present it is referred to as dual oscillations. In natural circulation loops, flow direction can also change during oscillations. Based on the direction of flow, the oscillations can be characterized as unidirectional, bi-directional or it can switch between the two. Such switching is often accompanied by period doubling, tripling or n-tupling.

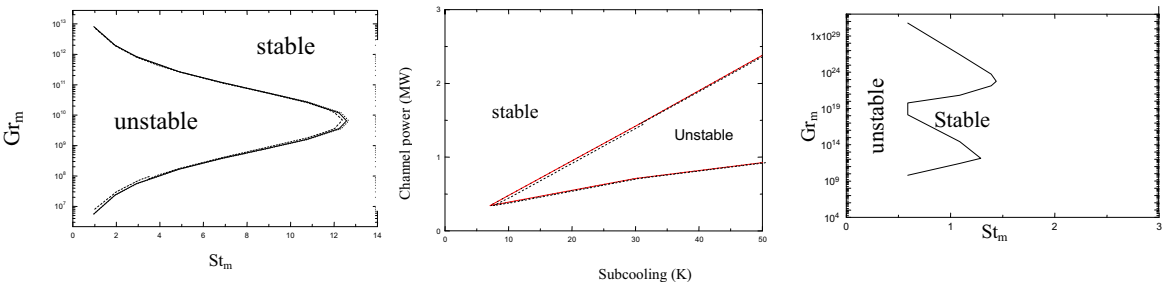

(a) single-phase density wave instability (b) Ledinegg instability c) typical stability map

FIG. 3. Stability maps for various instabilities

2.5. Based on the loop geometry

Certain instabilities are characteristic of the loop geometry. Examples are the instabilities observed in open U-loops, symmetric closed loops and asymmetric closed loops. In addition, pressure drop oscillations and the parallel channel instability are also characteristic of the loop geometry. Pressure drop oscillations normally occur in systems with a compressible volume (a pressurizer for example) at the inlet of the heated channel. Similarly, interaction among parallel channels can also lead to instability. Since both pressure drop and parallel channel oscillations are part of the compound dynamic instabilities, these will be discussed in detail later.

2.6. Based on the disturbances

Certain two-phase flow phenomena can cause a major disturbance and can lead to instability or modify the instability characteristics significantly. Typical examples are boiling inception, flashing, flow pattern transition or the occurrence of CHF. All these are static phenomena and are discussed either under static or compound static instability. Cold water injection can also cause a major disturbance and instability in natural circulation systems.

2.7. Closure

The classification based on the analysis methods is a very broad classification and all observed instabilities are found to belong to one or the other of the four classes, i.e. static, compound static, dynamic and compound dynamic instability. This is also the most widely accepted classification of instabilities. All other classifications are actually addressing only a subset of the instabilities considered in the above four main types. However, one of the major drawbacks is that it does not differentiate between natural and forced circulation systems. Today, we know that most known two-

phase instabilities are observable in both forced and natural circulation systems. However, there are certain instabilities associated with natural circulation systems, which are not observable in forced circulation systems. For example, single-phase NC systems exhibit instability where as single-phase forced circulation systems, generally, do not show instabilities. Besides, natural circulation systems exhibit an instability associated with flow direction whereas no such instability is reported for forced circulation systems.

All two-phase NCSs pass through the single-phase NC stage during the heat-up phase. In addition, boiling inception, which is an inevitable step for transition to two-phase flow, is a major disturbance for single-phase NCSs. As a result two-phase NC instabilities are observed right from boiling inception (same as low quality type-I instability described in section 2.2). Therefore, while examining natural circulation instabilities it is convenient to consider the single-phase, boiling inception and two-phase NC instabilities separately.

3. STABILITY OF SINGLE-PHASE NCS

Single-phase NC is the normal mode of coolant circulation in the district heating reactors, the proposed PWRs like CAREM and ABV and certain liquid metal reactors like the LFR and STAR-LM. It is also relevant to the supercritical natural circulation boilers and reactors. It is the observed mode of circulation in most pressurized light and heavy water reactors in case of complete loss of pumping power. Further, all two-phase NCSs pass through the single-phase region during the heat-up phase. Hence stability of single-phase natural circulation assumes importance during the start-up of natural circulation BWRs like AHWR and ESBWR.

Compared to two-phase flow instabilities, single-phase NC instability is not observed frequently in large industrial systems and the literature on it is much less. To the best of our knowledge, Keller (1966) and Welander (1967) carried out the early theoretical investigations on single-phase NC instability. The earliest reported experimental investigation is by Welander (1957). The first systematic experimental investigation of single-phase instability is by Creveling et al. (1975). Single-phase instability serves as a platform for improving our understanding of the NC instability and is of interest in the study of deterministic chaos (Bau and Wang (1991) and Lahey (1992)). Reviews on single-phase natural circulation instability are available in Zvirin (1981) and Greif (1988). Single-phase instabilities are of four different types:

a) Stability of the rest state
b) Static instabilities associated with multiple steady states,
c) Dynamic instabilities and,
d) Compound dynamic instabilities.

3.1. Stability of the Rest State

Generally, in a NCL, the fluid is stagnant (i.e. rest state) in the absence of heating. Following the application of heating, if the fluid continues to remain stagnant then its rest state is stable. If it begins to flow then the rest state is considered as unstable. Welander (1967) stated that the rest state of a loop with two vertical branches, a point heat source at the bottom and a point heat sink at the top, is always unstable. The stability of the rest state was also investigated by Bau and Torrance (1981) in an open loop and reached the same conclusion as that of Welander. However, Zvirin's (1985) analysis considering the effect of axial conduction in a vertical thermosyphon has shown that the rest state is unstable only if a suitably defined Rayleigh number exceeds a critical value. While Bau and Torrance employed a dynamic analysis, Zivirin has shown that the same result can be arrived at from the static as well as the dynamic analysis. Generally, the instability associated with the rest state is considered as a dynamic instability.

3.2. Static Instabilities due to multiple steady states

Multiple steady states lead to two types of instabilities:

a) Pure static instability and
b) Compound static instability

3.2.1. Pure Static Instability

Two types of multiple steady states are possible, i.e. multiple steady states in the same flow direction and multiple steady states with differing flow direction. Traditionally pure static instability is associated with multiple steady states in the same flow direction. In closed loops, multiple steady states in the same flow direction have not been observed experimentally under single-phase natural circulation conditions. However, it may be mentioned that theoretically this possibility exists, as the momentum equation describing the steady state flow is a polynomial (see Appendix-1). Multiple steady states in the same flow direction have been found analytically for the toroidal loop with a throughflow (Mertol et al. (1981)) and such a system can, in principle, exhibit pure static instability.

3.2.2. Compound Static Instability

This instability is observed in systems with multiple steady states associated with different flow directions and for most cases, the threshold of instability cannot be predicted from the steady state laws alone. For single-phase forced circulation loops, usually multiple steady states with differing flow direction is not possible as the pump developed pressure has a unique direction. This is not so in natural circulation loops, where the flow direction is determined by the direction of the buoyancy force. There are several NCSs where steady state flow can prevail either in the clockwise or in the anticlockwise direction. Examples are symmetric loops with horizontal heaters, NCS with parallel channels, and simple loops with asymmetric heating or a throughflow. The instability manifests itself in the unpredictability of flow direction during flow initiation or a seemingly unexplained flow reversal following a transient. In certain instances an oscillation growth scenario terminated by a flow reversal is also observable. Following the flow reversal, steady state flow is observed. The instability can also be observed in large reactor systems or test facilities during natural circulation.

<u>Symmetric Loops</u>

It is easy to see that steady NC flow in the loop shown in Fig. 4 can take place in the clockwise or anticlockwise direction depending on which vertical limb is the hot leg. For the loop shown in Fig. 4, irrespective of the flow direction, the flow rates will be of equal magnitude. For symmetric loops, the existence of the multiple steady states with differing direction manifests itself in the unpredictability of flow direction when heated during stagnant initial conditions. However, once the flow is initiated, it continues in the same direction even with increases in power if the loop is stable. It can also result in a flow reversal during transition from forced to natural circulation flow as follows

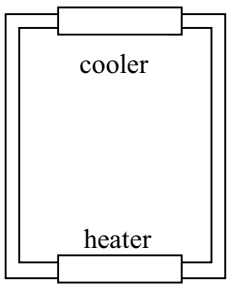

FIG. 4: A symmetric rectangular NCL

During transition from forced to natural circulation, generally the flow continues in the same direction as that of the initial forced flow due to the 'memory effect' caused by the residual buoyancy force

which is proportional to the temperature difference across the vertical legs during forced flow. However, the memory effect can be insignificant and the loop 'forgets' its initial flow direction if the initial forced flow is very large so that the temperature rise across the heater is too small. Tests indicated that the loop goes through a period of flow stagnation before the flow initiates again (Vijayan (1988)). Flow, when it restarts can be opposite to the initial forced flow direction. Other symmetric loops like the toroidal or figure-of-eight loop can behave in this manner.

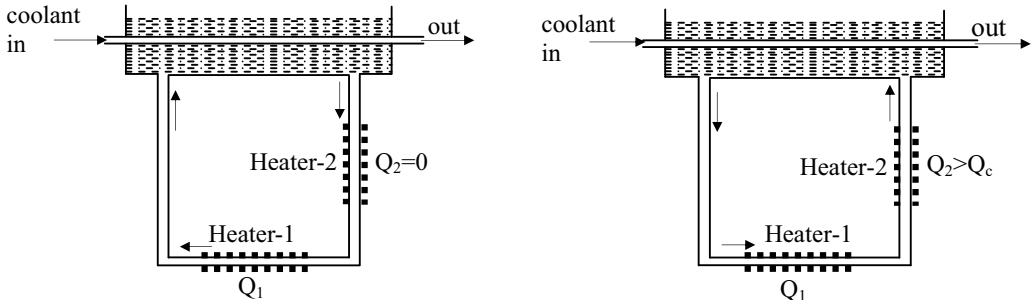

(a) Steady clockwise flow with only the horizontal heater powered

(b) Steady anticlockwise flow with both heaters powered and Q_2>Q_c

FIG. 5. Effect of flow direction on the instability

Asymmetric Loops

Bau and Torrance (1981a) have shown that another kind of multiple steady states with differing flow directions can exist in simple loops with asymmetric heating. To understand this, consider the loop shown in Fig. 5a, where the flow is established in the clockwise direction with only the horizontal heater powered. Now keeping the power of the horizontal heater constant, if we begin to increase the power of the vertical heater beyond a critical value, then instability will set in. This instability will be terminated with the flow reversal and steady NC flow ensues subsequently in the anticlockwise direction (see Fig. 5b). Also, if we reduce the power of the vertical heater back to zero, the instability will not be found. The fundamental cause of the instability is the time delay associated with the travel of the hot fluid from the exit of the vertical heater through the horizontal heater to the other vertical limb.

Similar instability can also be found in loops with upward flow in vertical cooler (Fig. 6). In this case, also, flow can initiate in either directions due to the presence of the horizontal heater. Tests in a rectangular loop have shown that even if flow initiated in the anticlockwise direction, the flow can reverse automatically (Fig.6b) for certain loop geometries (Vijayan et al. (2001)). Stability analysis showed that no steady state with anticlockwise flow exists in the loop for the conditions of the experiment (Fig. 6c).

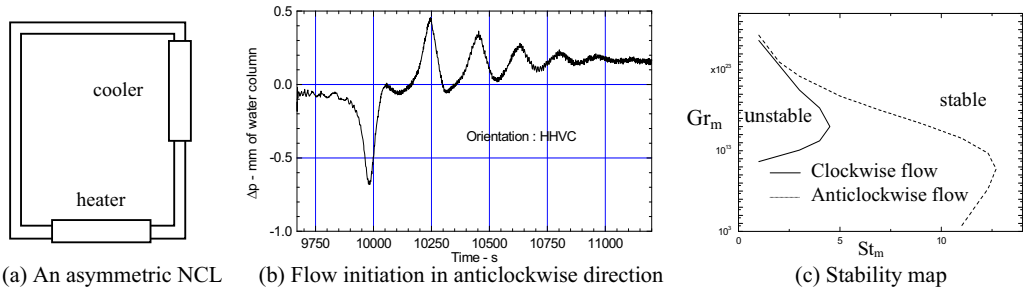

(a) An asymmetric NCL (b) Flow initiation in anticlockwise direction (c) Stability map

FIG. 6: Flow initiation in the anticlockwise direction in an asymmetric NC loop

Simple loops with throughflow

In rectangular loops with vertical heaters (Fig. 7a), generally the flow direction is such that upward flow prevails always in the vertical heater during steady states without throughflow. Even in such

cases, downward flow through the heater can be caused by cold water injection as shown in Fig. 7b. It has also been analytically found that multiple steady state solutions can be encountered when a throughflow (i.e. Feed mass flow equal to the bleed mass flow) is superimposed on the toroidal loop (Mertol et al. (1981)). Experimentally, the instability associated with multiple steady states with different directions has been studied by Vijayan and Date (1990 and 1992) in a figure-of-eight loop. Consider the figure-of-eight loop (relevant to PHWR) shown in Fig. 8 where a throughflow F is introduced into the loop while it was operating under steady state single-phase NC conditions. When the throughflow is small, it flows in the same direction as that of the NC flow (Fig. 8a). However, if the throughflow is above a critical value, then the loop flow begins to oscillate. One of the observed characteristics of this oscillation is that the amplitude in the low flow path is significantly higher and is 180^0 out-of-phase with that in the high flow path[2]. With further increase in throughflow, the amplitude of oscillation increases eventually leading to a flow reversal in a part of the loop as shown in Fig. 8b. However, both experimental and numerical investigations showed that the threshold value of throughflow at which the flow reversal occurs is dependent on the operating procedure followed in the experiments. Similar instability can also occur in loops relevant to other reactor systems.

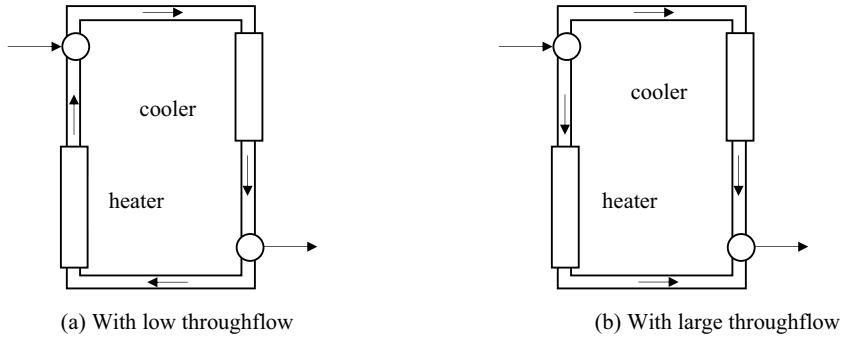

(a) With low throughflow (b) With large throughflow

FIG. 7. Asymmetric loop with multiple steady states with throughflow

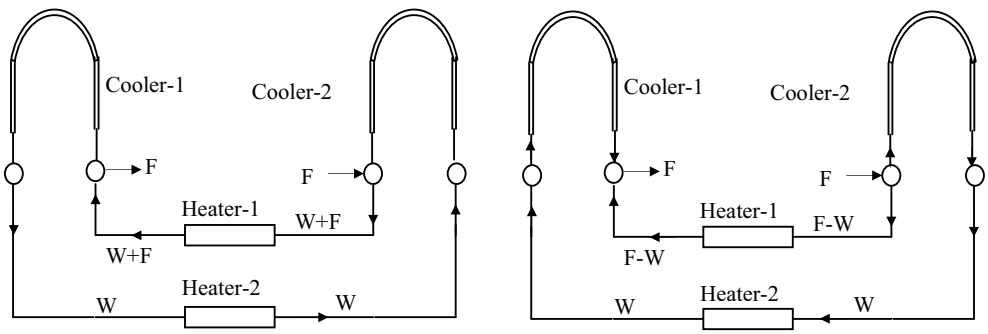

(a) With small throughflow (b) With large throughflow ($F>F_c$)

FIG. 8. Effect of throughflow on instability

Parallel Channel Systems with Mutually Competing Driving Forces

Parallel channel systems occur in BWRs, PWRs, PHWRs, VVERs, and steam generators/boilers. In a natural circulation system, the heated or cooled parallel channels are loosely coupled hydraulically to the rest of the loop due to the presence of mutually competing driving forces. To understand the phenomenon let us consider a NCS with a large number of parallel vertical unequally heated channels (see Fig. 9) connected between a common inlet and an outlet header (or plenum) with an unheated

[2] The out-of-phase oscillations are typical of parallel channel systems and it can be easily seen from Fig. 8b that a closed loop is actually a parallel channel system with two channels when the throughflow rate is large.

downcomer connected between the two headers. There is a buoyancy force between the unheated downcomer and each individual heated channel favoring upward flow through the heated channel. In addition, there is a buoyancy force between any two channels (caused by the differences in densities resulting from the differences in the channel heating rates) favoring downward flow through the low power channel. The channel flow direction is decided by the greater of the two buoyancy forces. Hence, when conditions are ripe, the flow in a parallel channel can reverse. It can be shown that such a situation exists if any of the channels is brought to zero power. In fact upward flow is unstable for any unheated channel in a system of parallel vertical heated channels under natural circulation conditions (see Appendix-2). This is a fundamental difference when compared to forced circulation systems.

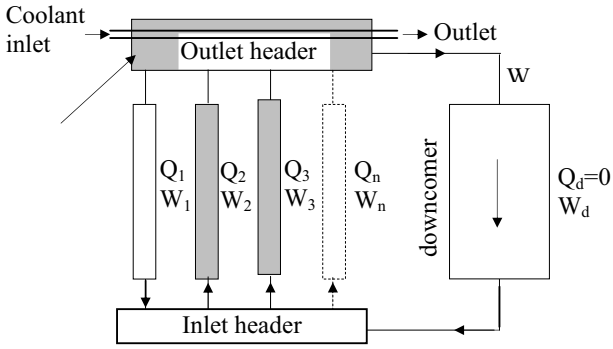

FIG. 9: A parallel channel natural circulation system

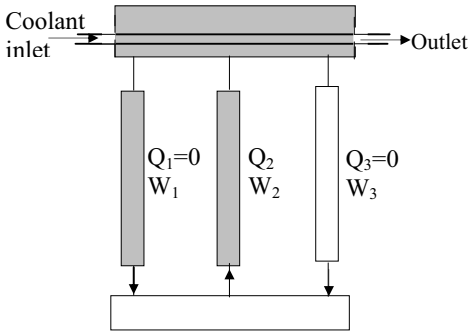

FIG. 10: Parallel channel system investigated by Chato (1963)

Chato (1963) demonstrated that if the system in Fig. 10 is started up by heating only one channel (Q_1=0 and Q_3=0), then a steady state would be achieved with the heated channel flowing up and the unheated channels flowing down. Now, if we begin to increase power to the down flowing channel-1 keeping power of channel-2 constant, then it will start flowing upwards only after reaching a critical value of power, Q_c. On the other hand, if heating is started in both the channels 1 and 2 simultaneously, then upward flow would be observed in both the channels even if $Q < Q_C$. Between $0<Q<Q_c$ channel-1 can flow up or down depending on the operating procedure and this region of power is called as metastable regime by Chato (1963). Fundamentally, this is the region where steady states with different flow directions are possible. The instability manifests itself in the form of a seemingly unexplained flow reversal in one or more parallel channels during power changes. Near the flow reversal threshold, one could also get sustained oscillations as that observed in the figure-of-eight loop with throughflow. Recently Gartia et al. (2007) have shown that the metastable regime also exhibits hysteresis. Their studies were carried out in a four channel system shown in Fig.11. They found that if channel-1 power is reduced from point A (Fig. 11a) with the initial flow direction as in Fig. 11 b, upward flow in channel-1 is observed till point B. Further reduction in power leads to flow reversal in channel-1 and it follows the path BCD. At D, if power is increased, channel-1 will follow the path DCEFA.

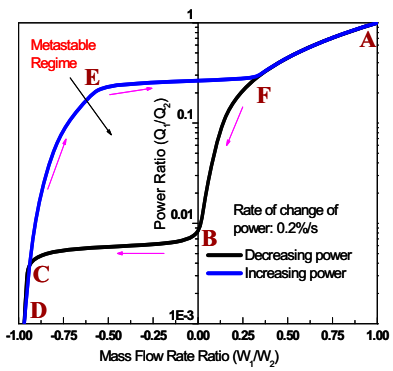

(a) Hysteresis loop

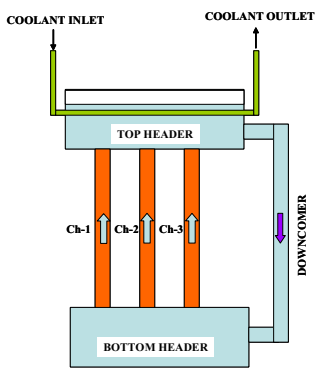

(b) Parallel channel loop

Fig. 11: Hysteresis computed with RELAP5/MOD3.2 code for a parallel channel system

With vertical parallel inverted U-tubes (such as that in the NC based steam generators of PWRs and PHWRs, Fig. 12a) Sanders (1988) has shown that single-phase natural circulation can become unstable and stable flow can exist with flow in the reverse direction in some of the U-tubes. Experimentally, these were observed in integral test facilities simulating nuclear reactor systems. For example, Kukita et al. (1988) observed reverse flows in some of the longest U-tubes during single-phase natural circulation tests in the ROSA-IV facility. Similar observations have been made in other integral test facilities simulating nuclear reactor systems.

Thermosyphoning tests conducted in Narora Atomic Power Station unit-1, has shown flow reversals in two of the instrumented channels (Vijayan et al. (1991)). Flow in one of these channels continued in the reverse direction during the steady state condition. Channel flow reversals have also been reported by Caplan et al. (1983) during transient thermosyphoning. All these evidences corroborate the existence of multiple steady states also in unequally heated parallel horizontal channels located at different elevations as in a PHWR (Fig. 12b).

3.3. Dynamic Instabilities

Essentially the dynamic instability in single-phase systems is also density wave instability although it was referred to as DWI only recently (Lahey, Jr (1992)). The frequency of DWO in single-phase flow is very low (0.0015 - 0.005 Hz) compared to two-phase flow (1 to 10 Hz) as the velocity of flow in single-phase NC is significantly lower than that in two-phase systems. In general, single-phase natural circulation system can show two types of dynamic instabilities. They are system instabilities and parallel channel instabilities.

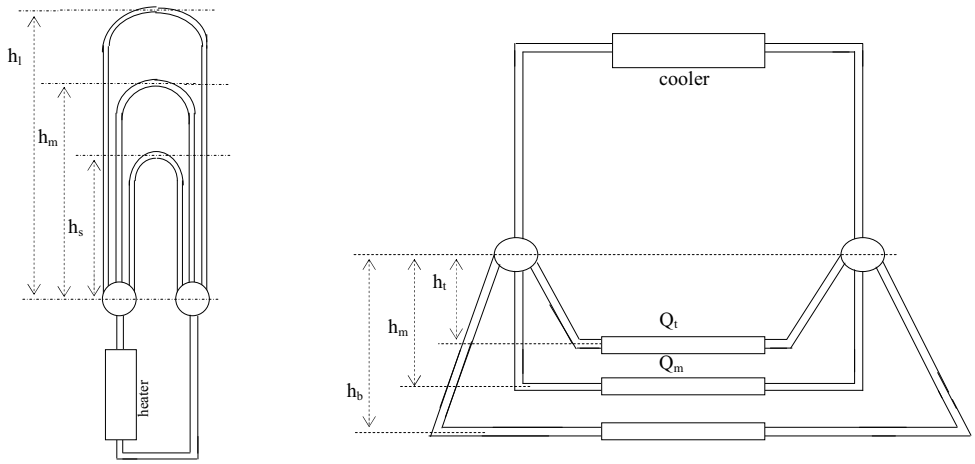

(a) Vertical parallel U-tubes with different elevations (b) Horizontal parallel heated channels relevant to PHWRs

FIG.12. Parallel channel systems

3.3.1. System Instabilities

Dynamic instabilities can develop in steady single-phase natural circulation systems through the oscillation growth mechanism. Compound static instabilities explained in the previous section also show oscillation growth mechanism near the threshold condition. The basic difference is that for the compound static instabilities, the oscillation growth and the instability can be terminated by a flow reversal. However, in case of pure dynamic instability, the oscillation growth is terminated by limit cycle oscillations, which can be periodic or chaotic. For example, Welander (1957) observed periodic bi-directional oscillations in an open vertical U-loop with period ranging from 20 seconds to 4 hours (Fig. 13a). Keller (1966) predicted unidirectional oscillations without flow reversal in a rectangular loop with a point heat source and a point heat sink located at the center of the bottom and top horizontal pipes respectively (Fig. 13b). Welander (1967) predicted chaotic oscillations with flow reversal in a closed loop with two vertical branches and a point heat source and a point heat sink (Fig.

13c). All these oscillatory modes were experimentally observed by Vijayan et al. (2007) in a rectangular loop with finite length of heater and cooler. They also identified the boundaries of each oscillatory regime in terms of the heater power for specified cooler conditions.

Welander (1967) carried out both analytical and numerical investigations of the growth of small-amplitude oscillations in a loop with two vertical branches having a point heat source and a point heat sink located at the bottom and top respectively and came out with a physical explanation for the oscillation growth. According to him, the dynamics of the NCS is such that a temporary disturbance either in the heater or the cooler (like an increase in heater power or decrease in the cooling water flow) can cause a pocket of fluid to issue out from the heater (or cooler) which is hotter than normal. As this hot pocket ascends along the vertical branch, it increases the flow rate and hence reduces its residence time in the cooler with the result that the identity of the hot pocket is maintained when it enters the downward flowing vertical pipe. In this leg as the hot pocket descends it reduces the flow rate and the flow rate is the minimum when it enters the heater. The increased residence time in the heater causes the hot pocket to emerge from the heater hotter than in the previous cycle. Simultaneously a cold pocket is also formed in the cooler due to the larger residence time in the cooler. As this hot pocket ascends and the cold pocket descends induced flow rate is more than in the previous cycle. The oscillation growth can continue in this way until flow reversal. Subsequently, Welander (1967) showed that the oscillation growth continues in the reverse direction leading to flow reversal and repetition of the process. Oscillation growth as a mechanism is found to be valid for the instability development from steady flow (Fig. 14). However, after the first flow reversal periodic bi-directional pulsing is observed in the experiments.

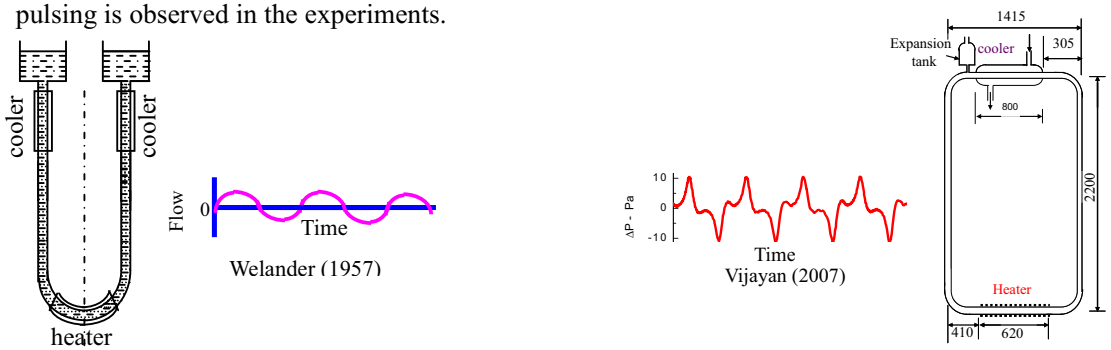

(a) Bi-directional pulsing (BDP) in a vertical U-loop (Welander 1957) and observed BDP in a rectangular loop (Vijayan (2007))

(b) Predicted and observed unidirectional pulsing (UDP)

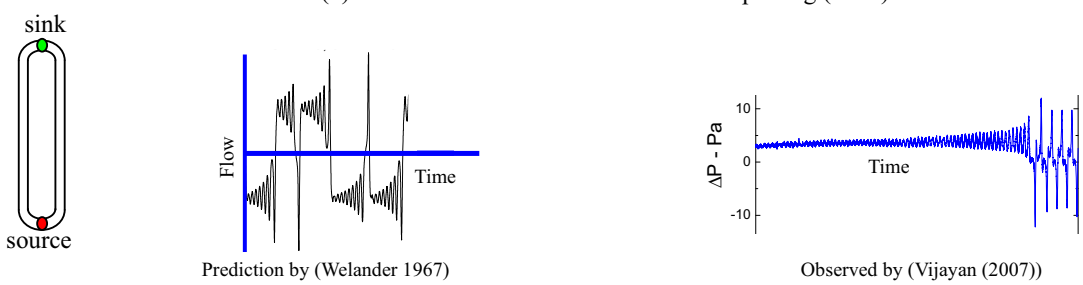

(c) Predicted and observed oscillation growth

FIG. 13. Dynamic instability in single-phase NCSs

Creveling et al. (1975) experimentally investigated the stability characteristics of the toroidal loop, which showed oscillatory behaviour as predicted by Welander (1967). Unstable oscillatory behaviour was also observed in rectangular loops by Vijayan et al. (1992), Misale et al. (1998 and 1999) and Nishihara (1997)). Numerical simulation showed several oscillatory modes in the simple rectangular loop (Manish et al. (2002)) other than those observed in the experiment. Recently Vijayan et al. (2004) numerically simulated the entire unstable oscillatory regime in a rectangular loop from the lower threshold to the upper threshold which showed the rich variety of oscillatory modes possible. As we approach the instability threshold unidirectional oscillations are observed first followed by chaotic switching regime. With increase in power, periodic bi-directional flow is observed. With further increase in power, the periodic bi-directional oscillations become chaotic with the degree of chaos increasing with power.

3.3.2. Parallel channel instability

Apart from the static instability discussed earlier, parallel channel systems can have a dynamic instability mode, which is also related to the loose coupling of the parallel channels with the external circuit especially at low Δp across the parallel channels. A possible mechanism for this instability is as follows:

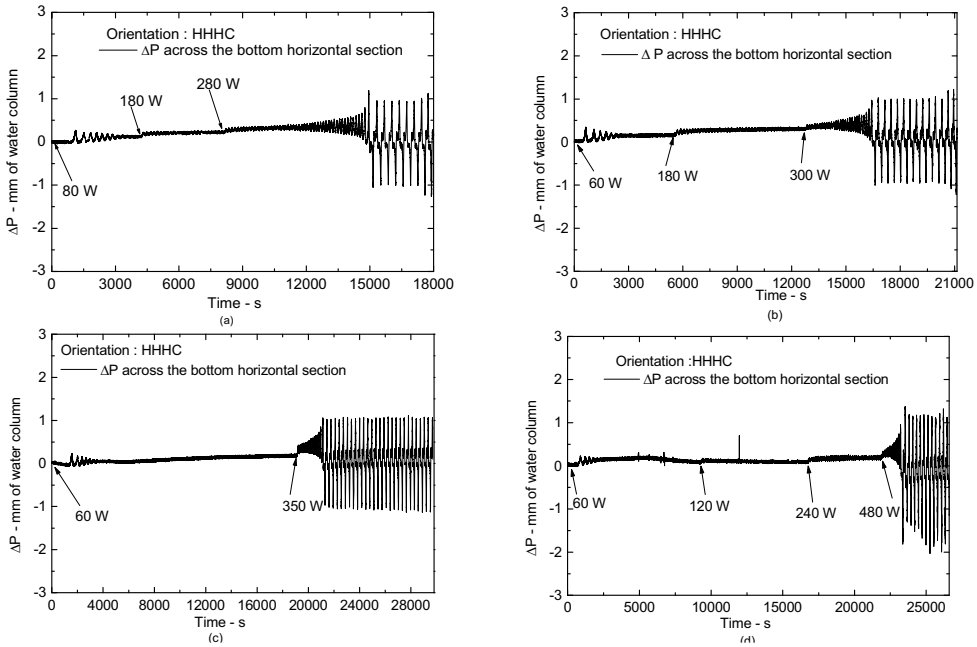

FIG.14. Instability development by the oscillation growth mechanism

Consider a system with a large number of parallel channels operating under steady single-phase NC condition. Let us consider a temporary disturbance in the form of an increase in the power of one of the channels (For convenience, we call it the disturbed channel). The increase in power will increase the exit temperature and reduce its density and hence the gravitational pressure drop causing the flow to accelerate (as the Δp across the parallel channels must be same). The neighboring channel supplies the extra flow demanded by the disturbed channel as the increased buoyancy driving force (between the channels) retards the upward flow in the neighboring channel. Because of the increased flow in the disturbed channel its exit temperature drops and its average density tends to increase. Simultaneously, the neighboring channel that supplied the excess flow tends to experience an increase in exit temperature and a decrease in density and hence the pressure drop causing the flow to increase. This time the neighbor channel demands more flow from the disturbed channel which is decelerating and the process repeats itself if the conditions are right. It may be noted that the sum of the change in densities of the disturbed and the neighbor channel always add up to zero. As a result, the flow in the

external circuit remains unaffected as it depends on the average density in the parallel channels, which does not change practically. The mechanism of parallel channel instability as explained above considered only two channels and out-of-phase oscillations with 180^0 phase shift is the expected mode. However, in a system with a large number of parallel channels, it is possible that several parallel channels can be involved, and the phase shift can obviously be different.

3.4. Compound Dynamic Instabilities

Compound dynamic instabilities with the system density wave oscillations superimposed on the parallel channel oscillations are possible with single-phase parallel channel natural circulation systems. Theoretical investigations in a two channel toroidal loop by Satoh et al (1998) show an in-phase and an out-of-phase oscillation mode. Experimental and theoretical study by Satou et al (2001) show that the parallel channel toroidal system becomes unstable at a higher power than single channel system.

4. TWO-PHASE NC INSTABILITIES (TYPE-I) ASSOCIATED WITH BOILING INCEPTION

Boiling inception is a large enough disturbance that can bring about significant change in the density and hence the buoyancy driving force in a NCS. A stable single-phase NCS can become unstable with the inception of boiling. Boiling inception also considerably affects pure single-phase instability. Boiling inception is a static phenomenon that can lead to instability in low pressure systems. However, prediction of the threshold of instability requires consideration of the feedback effects. Hence the instability belongs to the class of compound static instability. In this case, however, the instability continues with limit cycle oscillations. The instability during boiling inception can also be significantly affected by the presence of parallel channels.

4.1. Effect of Boiling Inception on Unstable Single-phase NC

With increase in power, subcooled boiling begins in an unstable single-phase system leading to the switching of flow between single phase and two-phase regimes. Experiments in a rectangular loop showed that subcooled boiling occurs first during the low flow part of the oscillation cycle (Vijayan et al. (2001 and 2004)). The bubbles formed at the top horizontal heated wall flows along the wall into the vertical limb leading to an increase in flow rate. The increased flow suppresses boiling leading to single-phase flow. Several regimes of unstable flow with subcooled boiling can be observed depending on the test section power such as (a) instability with sporadic boiling (boiling does not occur in every cycle), (b) instability with subcooled boiling once in every cycle, (c) instability with subcooled boiling twice in every cycle and (d) instability with fully developed boiling. The change in power required from the first to the last stage is quite significant and it may not be reached in low power loops.

4.2. Effect of Boiling Inception on Steady Single-phase NC

A common characteristic of the instabilities associated with boiling inception is that single-phase conditions occur during part of the oscillation cycle. With the bubbles entering the vertical tubes, the buoyancy force is increased which increases the flow. As the flow is increased, the exit enthalpy is reduced leading to suppression of boiling. This reduces the buoyancy force and the flow, increasing the exit enthalpy resulting in boiling and leading to the repetition of the process. Krishnan and Gulshani (1987) observed such instability in a figure-of-eight loop. They found that the single-phase circulation was stable. However, with power increase, the flow became unstable as soon as boiling was initiated in the heated section. It is known that the instability due to boiling inception disappears with increase in system pressure due to the strong influence of pressure on the void fraction and hence the density (Fig. 15). However, for a given system, it is not known at what pressure this instability disappears nor its dependence on the loop geometry. Knowledge of this pressure is essential for

arriving at a rational start-up procedure for NCBWRs. Flashing and Geysering instability also belong to this category.

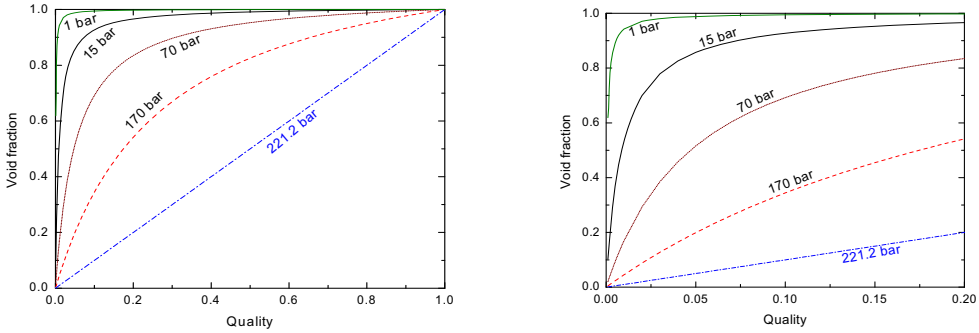

(a) For the entire range of qualities (b) For low qualities

FIG.15: Effect of pressure on the void fraction

4.3. Flashing instability

Flashing instability is expected to occur in NCSs with tall, unheated risers. The fundamental cause of this instability is that the hot liquid from the heater outlet experiences static pressure decrease as it flows up and may reach its saturation value near the exit of the riser causing it to vaporize. The increased driving force generated by the vaporization, increases the flow rate leading to reduced exit temperature and suppression of flashing. This in turn reduces the driving force and flow causing the exit temperature to increase once again leading to the repetition of the process. The necessary condition for flashing is that the fluid temperature at the inlet of the riser is greater than the saturation temperature corresponding to the pressure at the exit (Jiang et al. (1995)). Typical flashing induced instability observed in the integral test facility simulating AHWR is shown in Fig. 16. The instability is characterized by low frequency (~ 0.0014Hz) oscillations (see Fig. 16b, replotted from Fig 16a) and is observed only in low-pressure systems.

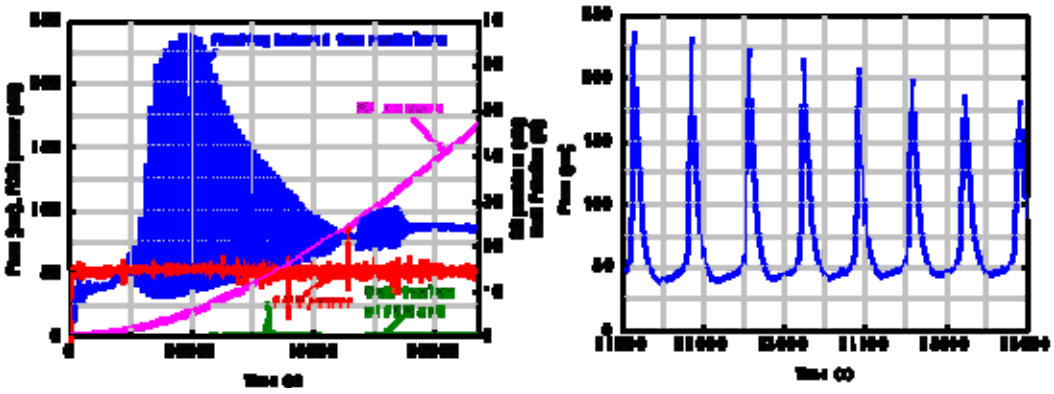

(a) *(b)*

Fig. 16. Typical Flashing instability observed in ITL at 0.1 MPa

4.4. Geysering

Geysering was identified by both Boure et al. (1973) and Aritomi et al. (1993) as an oscillatory phenomenon which is not necessarily periodic. The proposed mechanism by both the investigators differ somewhat. However, a common requirement for geysering is again a tall riser at the exit of the heated section. When the heat flux is such that boiling is initiated at the heater exit and as the bubbles begin to move up the riser they experience sudden enlargement due to the decrease in static pressure and the accompanying vapor generation, eventually resulting in vapor expulsion from the channel. The liquid then returns, the subcooled nonboiling condition is restored and the cycle starts once again. The

main difference with flashing instability is that the vapor is produced first in the heated section in case of geysering where as in flashing the vapor is formed by the decrease of the hydrostatic head as water flows up.

The mechanism as proposed by Aritomi et al. (1993) also considers condensation effects in the riser. According to him, geysering is expected during subcooled boiling when the slug bubble detaches from the surface and enters the riser (where the water is subcooled) where bubble growth due to static pressure decrease and condensation can take place. The sudden condensation results in depressurization causing the liquid water to rush in and occupy the space vacated by the condensed bubble. The large increase in the flow rate causes the heated section to be filled with subcooled water suppressing the subcooled boiling and reducing the driving force. The reduced driving force reduces the flow rate increasing the exit enthalpy and eventually leading to subcooled boiling again and repetition of the process. Geysering involves bubble formation during subcooled conditions, bubble detachment, bubble growth and condensation. Geysering is a thermal nonequilibrium phenomenon. On the other hand, during flashing instability, the vapour is in thermal equilibrium with the surrounding water and they do not condense during the process of oscillation. Both these instabilities are observed during low pressure conditions only.

5. TWO-PHASE NC INSTABILITY

Several reviews on two-phase instability are available (Boure et al. (1973), Yadigaroglu (1978), and Kakac (1985)). None of these are specific to NCSs although most of the instabilities can be observed in forced and natural circulation systems.

5.1. Pure or fundamental Static Instability

The cause of the phenomenon lies in the steady state laws and hence the threshold of the instability can be predicted using the steady state governing equations. Static instability can lead either to a different steady state or to a periodic behavior. Commonly observed static instabilities are flow excursion and boiling crisis.

5.1.1. Flow Excursion or Excursive Instability

It is also known as Ledinegg instability, after the scientist who discovered it for the first time (Ledinegg (1938)). It involves a sudden change in the flow rate to a lower value. The new flow rate may induce the occurrence of CHF. The occurrence of multiple steady state solutions is the fundamental cause of this instability (see Fig. 17a). While drawing the head versus flow characteristic of NCSs, it is customary to consider the driving pressure differential as that due to the liquid head in the downcomer (Fig. 17b) which is almost independent of the flow rate due to the negligible friction pressure loss (Todreas and Kazimi (1990)). The stability criterion for the Ledinegg type instability is given by $d(\Delta P)/dG < 0$ i.e. negative slope in static system characteristic. Point 'b' in Figure 17a satisfies this criterion and is therefore unstable.

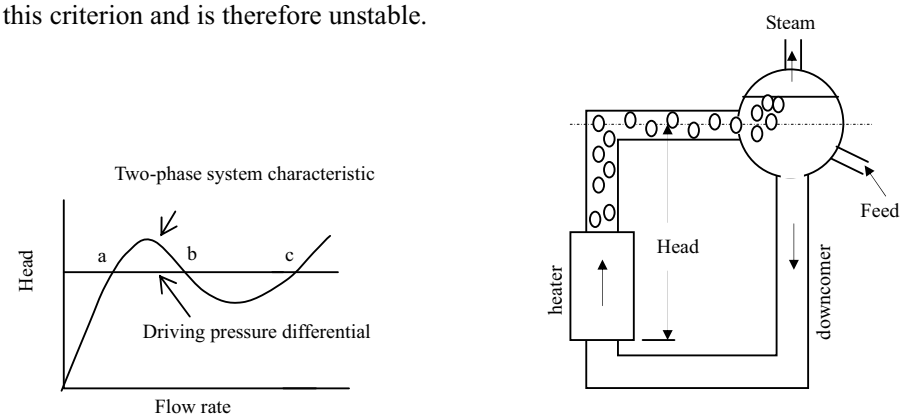

(a) Ledinegg instability in two-phase NCLs (b) A simple two-phase NC loop

FIG. 17. Mechanism of excursive instability

The instability can also be observed in forced flow systems. In forced circulation systems, the instability can be avoided by inlet throttling. However, this option may not work as effectively as in forced flow due to the reduction in the flow caused by the introduction of inlet throttling in NCSs.

5.1.2. Boiling Crisis

Following the occurrence of the critical heat flux, a region of transition boiling may be observed in many situations as in pool boiling (see Fig.18a). During transition boiling a film of vapour can prevent the liquid from coming in direct contact with the heating surface resulting in steep temperature rise and even failure. The film itself is not stable causing repetitive wetting and dewetting of the heating surface resulting in an oscillatory surface temperature. The instability is characterized by sudden rise of wall temperature followed by an almost simultaneous occurrence of flow oscillations. This shall not be confused with the premature occurrence of CHF during an oscillating flow, in which case the oscillations occur first followed by CHF (see Fig. 18b).

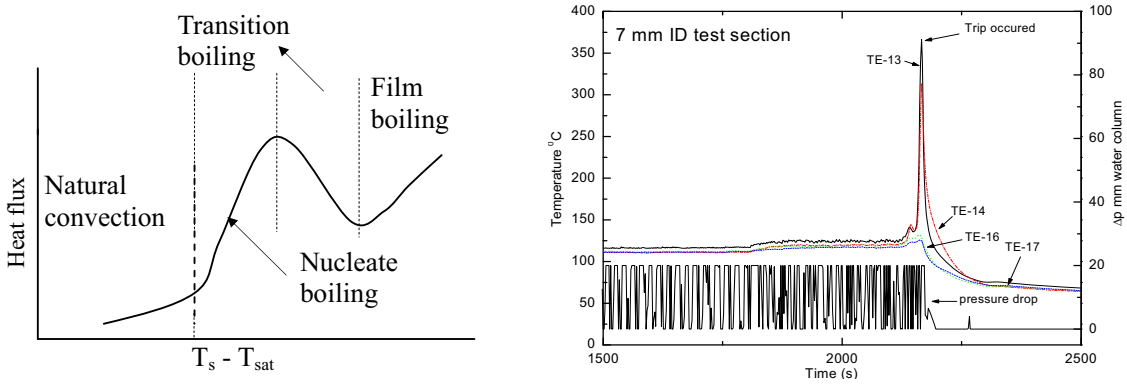

(a) Pool boiling heat transfer regimes (b) CHF occurrence during unstable oscillations

FIG. 18. Instability due to boiling crisis

5.2. Compound Static Instability

Two-phase systems also exhibit the instabilities associated with multiple steady states in different flow directions as in single-phase flow and will not be discussed further here. All the instabilities associated with boiling inception such as flashing and geysering discussed earlier also belong to this category. Flow pattern transition instability also belongs to this category.

5.2.1. Flow pattern Transition Instability

Two-phase systems exhibit different flow patterns with differences in the pressure drop characteristics, which is the fundamental cause of this instability. For example, the bubbly-slug flow has a higher pressure drop compared to annular flow. Consider a two-phase NCS operating near the slug to annular flow transition boundary. A small temporary disturbance in power can slightly increase the vapour production rate causing the flow pattern to change to annular. Due to the low pressure drop in annular flow, the flow rate increases leading to lower exit enthalpy and reduction in steam quality. The reduced steaming rate cannot support annular flow and the flow pattern changes to slug. The increased pressure drop of slug flow pattern reduces the flow rate which in turn increases the exit enthalpy and steam production rate causing the flow to revert to annular and the cycle repeats itself. Theoretical analysis of the phenomena is hampered by the unavailability of validated flow pattern specific pressure drop correlations and flow pattern transition criteria. Recently Nayak et al. (2003) proposed an analytical model for the flow pattern transition instability in a pressure tube type heavy water reactor. They found that the instability is similar to the Ledinegg type, but occurs at a higher power. The analysis neglected the transient effects.

5.2.2. Parallel Channel Systems

Two-phase parallel channel systems exhibit two types of multiple steady states: multiple steady states in the same flow direction (Ledinegg instability) as well as different flow direction (compound static instability). Linzer and Walter (2003) studied the latter and derived a criterion for flow reversal in a parallel channel system with a common downcomer. For a system with two heated channels and a common downcomer, the critical power ratio at which the flow reversal occurs is found to be dependent on the power of the other heated channel. In fact the critical power ratio is found to increase with the power of the other heated channel.

5.3. Dynamic Instability

Regenerative feedback and time delay effects are important for dynamic instability and hence analysis requires consideration of the unsteady governing equations. As already mentioned DWI is the most commonly observed instability in natural circulation loops. The mechanism causing this instability is already discussed in section 2.2.2. Tall risers and long horizontal or inclined pipes, can significantly influence the instability. Other geometric parameters that affect the instability are the orientation of the source and sink, inlet orificing, length and diameter of source, sink and connecting pipes, etc. The operating parameters that significantly affect the instability are the inlet subcooling, system pressure, power, power distribution and cooler (or SG) secondary conditions. A number of auxiliary parameters such as transient heat storage in the boundary walls, variable heat transfer coefficient and fluid friction influence the instability.

5.4. Compound Dynamic Instability

Instability is considered compound when more than one elementary mechanisms interact in the process and cannot be studied separately. If only one instability mechanism is at work, it is said to be fundamental or pure instability. Examples of compound instability are: (1) Thermal oscillations, (2) Parallel channel instability (PCI), (3) Pressure drop oscillations and (4) BWR (Boiling Water Reactor) instability.

5.4.1. Thermal Oscillations

In this case, the variable heat transfer coefficient leads to a variable thermal response of the heated wall that gets coupled with the DWO. Thermal oscillations are considered as a regular feature of dryout of steam-water mixtures at high pressure (Boure et al. (1973)). The steep variation in heat transfer coefficient typical of transition boiling conditions in a post CHF scenario can get coupled with the DWO. During thermal oscillations, dryout or CHF point shift downstream or upstream depending on the flow oscillations. Hence thermal oscillations are characterized by large amplitude surface temperature oscillations (due to the large variation in the heat transfer coefficient). The large variations in the heat transfer coefficient and the surface temperature causes significant variation in the heat transfer rate to the fluid even if the wall heat generation rate is constant. This variable heat transfer rate modifies the pure DWO.

5.4.2. Parallel Channel Instability (PCI)

Interaction of parallel channels with DWO can give rise to interesting stability behaviours as in single-phase NC. Experimentally, both in-phase and out-of-phase oscillations are observed in parallel channels. However, in-phase oscillation is a system characteristic and parallel channels do not generally play a role in it. With in-phase oscillation, the amplitudes in different channels can be different due to the unequal heat inputs or flow rates. Occurrence of out-of-phase oscillations is characteristic of PCI. The phase shift of out-of-phase oscillations (OPO) is known to depend on the number of parallel channels. With two channels, a phase shift of 180^0 is observed. With three channels, it can be 120^0 and with five channels it can be 72^0 (Fukuda and Hasegawa (1979)). With n-

channels, Aritomi et al. (1986) reports that the phase shift can be 2π/n. However, depending on the number of channels participating, the phase shift can vary anywhere between π and 2π/n. For example, in a 3-channel system one can get phase shift of 180^0 or 120^0 depending on whether only two or all the three channels are participating. Recent experiments in a four channel system showed that the phase shift does not remain the same throughout (Fig.19). The mechanism of parallel channel instability is similar to that in single-phase systems. PCI is initiated by events within the parallel channels and is not observable in the common points of the system. The instability is also possible with the horizontal parallel channels used in pressure tube type PHWRs and with the vertical U-tube type parallel channels of SGs.

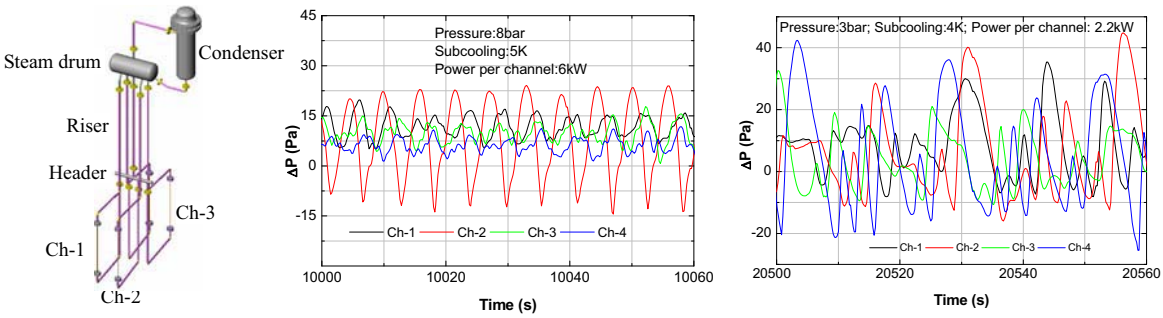

Fig. 19: Typical oscillatory behaviour observed in a four channel system

5.4.3. Pressure drop oscillations (PDO)

Pressure drop oscillations are associated with operation in the negative sloping portion of the pressure drop - flow curve of the system. It is caused by the interaction of a compressible volume (surge tank or pressurizer) at the inlet of the heated section with the pump characteristics and is usually observed in forced circulation systems. DWO occurs at flow rates lower than the flow rate at which pressure drop oscillation is observed. Usually, the frequency of pressure drop oscillation is much smaller and hence it is easy to distinguish it from density wave oscillations. However, with a relatively stiff system, the frequency of PDO can be comparable to DWO making it difficult to distinguish between the two. Very long test sections may have sufficient internal compressibility to initiate pressure drop oscillations. Like Ledinegg instability, there is a danger of the occurrence of CHF during pressure drop oscillations. Also, inlet throttling (between the surge tank and the boiling channel) is found to stabilize PDO just as Ledinegg instability.

5.4.4. BWR Instability

Here the void reactivity feedback gets coupled with the flow dynamics of the density wave instability. The system pressure, the fuel time constant and the void reactivity coefficient have a strong influence on the instability. It is also known as coupled neutronic-thermal hydraulic instability that manifests itself as induced power oscillations in the core through neutronic feedback. A schematic of the BWR dynamic feedback loop is given in Fig.20.

Normally, the BWRs have a negative void reactivity coefficient. That means, if the void increases due to reduction of flow during a thermal hydraulic oscillation event, the power will reduce by the negative void reactivity coefficient. However, the effect of negative void reactivity feed back coefficient on the thermal hydraulic stability depends on the fuel time constant. The fuel time constant is basically the delay time associated with the transfer of heat from the fuel to the coolant, which is dependent on the fuel rod diameter, thermal conductivity of fuel, clad, the gap conductance across the fuel and clad, and the coolant side heat transfer coefficient. This also varies with operational conditions and burn-up. Mostly in commercial BWRs this value is of the order of 6 to 10 seconds. The thermal hydraulic oscillation frequency in BWRs is of the order of 0.3 to 0.5 Hz. Hence the fuel time constant can destabilize due to phase delay. But it can stabilize due to the inherent filtering of the oscillations having a frequency greater than 0.1 Hz as shown by March-Leuba and Ray (1993). It is

seen from the work of Rao et al. (1995) that a very small fuel time constant (less than 0.1 s) can stabilize the thermal hydraulic oscillations since there is no delay, and hence an increase in void fraction would reduce the power which will reduce the void fraction and hence stabilizes. Similar results are also observed for large fuel time constants when the negative void reactivity feed back stabilizes due to decrease in gain of void-power transfer function.

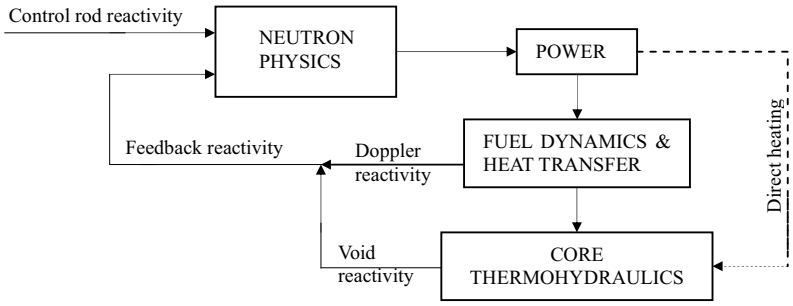

FIG.20. The BWR feedback loop

There are many incidents of instabilities in commercial BWRs. A review of the coupled neutronic-thermalhydraulic instabilities is given by March-Leuba and Rey (1993). The BWR instability is a known phenomenon since the 1960s. The problem has been considered solved several times. For example, most reactors built during the 1960s and 1970s did not show instability. But instability events began to surface in the BWR designs of the 1980s (see Table-1). The knowledge gained from past instability events has helped to improve our understanding of BWR instabilities and to develop techniques for avoiding it in future. Hence a brief review of the instabilities is given here. The reported BWR instabilities can be categorized into two: viz., instability events and instability tests. The instability events occurred inadvertently in the plant whereas instability was excited deliberately during tests. An overview of reported instability events including the date of occurrence, the plant involved, the country to which it belonged and the initiating event that caused the instability are given in Table-1.

TABLE 1: AN OVERVIEW OF INSTABILITY EVENTS

Date	Plant	Location	Remarks
30.06.82	Coarso	Italy	Core instability during start-up
13.01.84	Coarso	Italy	Instability after pump trip
17.10.84	S. maria	Spain	Power oscillations during operation
23.02.87	TVO	Finland	Power oscillations during power raising
09.03.88	La Salle2	USA	Core instability due to pump trip event
29.10.88	Vermont Yankee	USA	power oscillations
26.10.89	Ringhals	Sweden	Instability during power rise after refueling
08.01.89	Oskarshamn	Sweden	Power oscillations
29.01.91	Cofrentes	Spain	Power oscillations
03.07.91	Isar	Germany	Power oscillations following trip of 4 out of 8 pumps
15.08.92	WNP	USA	Power oscillations during start-up
09.07.93	Perry	USA	Entry into a region of core instability
01.1995	Laguna Verde	Spain	Power oscillations during start-up
17.07.96	Forsmark	Sweden	Local oscillations due to a bad seated fuel assembly
08.02.98	Oskarshamn-3	Sweden	Power oscillations during start-up
25.02.99	Oskarshamn-2	Sweden	Power oscillations after a turbine trip with pump run back
--.11.01	Philippsburg-1	Germany	In-phase power oscillations

These instability events helped to identify the initiating events that can lead to instability as listed below: (a) pump trip (partial or total), (b) start-up or power rise, (c) operator error, (d) loss of feed

water heating, (e) power rise after refueling or improper fuel loading and (f) bad combination of core design and control rod pattern.
There are many cases of instability observed during stability tests. Typical examples are: Finnish BWRs (TVO-I and II), Swedish BWRs (Forsmark 1,2 &3, Ringhals, Oskarshamm & Barseback), US BWR (Peach Bottom), Italy (Coarso) and Switzerland (Leibstadt).
The instability events and tests show that current designs of BWRs are not completely stable for their entire flow-power map and core power oscillations is an inherent characteristic of the instability. Most of the plants showed limit cycle oscillations with decay ratio (DR) equal to 1. Oscillations started from one zone and propagated to the other zones. All instability events have occurred during low flow conditions (30 to 40 %) with power in the range of 40 to 70% (D'Auria (1997)). Both in-phase and out-of-phase oscillations were observed. The in-phase mode of oscillations could be deliberately transformed into out-of-phase oscillations by changing some control rod positions. Radial and axial power profile is found to affect the instability. A strongly bottom peaked axial power profile makes the core more unstable and a radially increasing power shape makes the core susceptible to excite out-of-phase oscillations.

Modern BWRs have a respectable size forbidden zone with clear operating procedures to avoid it. However, certain transients can cause entry into the forbidden zone. Instability events and tests have clearly established that three different types of oscillations can happen if we enter the forbidden zone. These are:
(1) In-phase oscillations (IPO) (System instability, core-wide or global instability),
(2) Out-of-phase oscillations (OPO) (Parallel channel instability (PCI)) and
(3) Dual Oscillations observed in the overlapping region of IPO and OPO.

The whole loop (in fact the entire plant) will take part in the in-phase instability (IPI). Usually it is initiated by events outside the core like loss of feed water heaters, pumps (loss of pumps can excite PCI also), etc. It is easily detected and terminated by the scram system. During PCI, one half of the core oscillates azimuthally out-of-phase with the other half (commonly observed and also known as regional oscillations). During regional oscillations, average power level does not change as long as the sum of the positive and negative oscillations add up to zero and hence APRM (Average Power Range Monitor) cannot or timely detect OPO. Local oscillations in the core also is possible, but is rarely observed.
Since the flow in the recirculation loop is in single-phase condition, the recirculation flow dynamics usually has a positive effect in reducing the thermal hydraulic feed back gain and hence stabilizes IPI. However, in case of an out-of-phase instability, the flow feed back has a very large gain since the flow in the channels are in two-phase condition and the recirculation loop friction does not come into play. But the neutronic feed back has higher gain for the core-wide instabilities (fundamental mode oscillation) and lower gain for the out-of-phase instabilities since they occur in damped subcritical modes.

5.4.5. Instability in Natural Circulation BWRs

The flow velocity in natural circulation BWRs is usually smaller than that of forced circulation BWR. Besides, due to the presence of tall risers in natural circulation BWRs, the frequency of density-wave oscillation can be much lower due to longer traveling period of the two-phase mixture in the risers. The effects of negative void reactivity feed back are found to stabilize the very low frequency Type I instabilities (Van Bragt and van der Hagen (1998) and Nayak et al. (2000)). But it may stabilize or destabilize the Type II instabilities depending on its time period.

In case of a natural circulation BWR, the existence of a tall riser or chimney over the core plays a different role in inducing the instability. Series of experiments carried out by Van der Hagen et al. (2000) in the Dodewaard natural circulation BWR in The Netherlands showed that instabilities could occur at low as well as at high powers in this reactor. From measured decay ratio, it was evident that at very low power there is a trend of increase in decay ratio and similar results are seen at higher power

also. The low power oscillations are induced by the Type I density-wave instabilities and high power oscillations are induced by the Type II density-wave instabilities. Type I and Type II instabilities have been predicted to occur in the Indian AHWR which is a natural circulation pressure tube type BWR, away from the nominal operating condition (Nayak et al. (2000)). It may be noted that in case of forced circulation BWRs, instabilities observed under natural circulation conditions are due to pump trip transients when the core exit quality is high due to low flow and high power. Hence these are induced by the Type II density-wave instabilities only.

6. CONCLUDING REMARKS

Various bases used for classification of instabilities have been reviewed. The most widely accepted classification is based on the method of analysis used in identifying the stability threshold. This method of classification covers the entire spectrum of instabilities observed to date. Other classifications that are in common use today are in fact subcategories of a particular class of the instabilities covered under this classification. While classifying instabilities of NCSs, a need was felt to consider the instabilities associated with single-phase condition, boiling inception and two-phase condition separately as a natural circulation system progresses through all these stages before reaching the fully developed two-phase circulation. Most instabilities observed in forced circulation systems are observable in natural circulation systems. However, natural circulation systems are more unstable due to the regenerative feedback inherent in the mechanism causing the flow. Besides the instability in single-phase systems, natural circulation loops also exhibit an instability associated with flow reversal in contrast to forced circulation systems.

NOMENCLATURE

A - flow area, m^2
b - exponent in the friction factor correlation
Cp - specific heat, J/kg K
D - loop diameter, m
f - Darcy friction factor
g - acceleration due to gravity, m/s^2
H - loop height, m
K - local pressure loss coefficient
L_t - total loop circulation length, m
p - coefficient in the friction factor correlation
Δp - pressure drop, Pa
Q - total heating rate, W,
q - heat flux, W/m^2
R - total hydraulic resistance, m^{-4}
Re - Reynolds number ($DW/A\mu$)
T - temperature, K
t - time, s
U - overall heat transfer coefficient, W/m^2K
W - mass flow rate, kg/s
x - coordinate around the loop, m
z - elevation, m

Greek Symbols

α - thermal diffusivity, m^2/s
θ - nondimensional temperature
μ - dynamic viscosity, kg/ms
ρ - density, kg/m^3
τ - nondimensional time

ω - nondimensional flow rate

Subscripts

1 - channel 1
2 - channel 2
c - cooler
cl - cold leg
d - downcomer
e - external circuit
f - friction
i - internal circuit
h - heater
hl - hot leg
s - secondary

REFERENCES

Achard, J-L, Drew, D.A, Laher Jr, R.T, 1985, The analysis of nonlinear density wave oscillations in boiling channels, *Journal of Fluid Mechanics,* **155**, pp.213-232.

Ambrosini, W, Forgione, N, Ferreri, J.C, and Bucci, M, The effect of wall friction in single-phase natural circulation stability at the transition between laminar and turbulent flow, to appear in *Annals of Nuclear Energy*, 2004.

Aritomi, M, Aoki, S and Inoue, A, 1986, Thermo-hydraulic instabilities in parallel boiling channel systems, Part 1. A nonlinear and a linear analytical model, *Nuclear Engineering Design* **95**, pp.105-116.

Aritomi, M and Chiang, J.H, 1993, Geysering in parallel boiling channels, *Nuclear Engineering and Design,* **141**, pp.111-121.

Bau, H.H. and Torrance, K.E, 1981, Transient and steady state behaviour of an open, symmetrically heated, free convection loop, *Int. J. Heat Mass Transfer* **24**, pp.597-609.

Bau, H.H. and Torrance, K.E, 1981a, On the stability and flow reversal of an asymmetrically heated open convection loop, *J. Fluid Mech.* **106**, pp.417-433.

Bau H.H. and Wang, Z.Y. 1992, Chaos: a heat transfer perspective, in C.L. Tien (ed.), *Annual Review of Heat Transfer,* Vol.4.

Boure, J.A, Bergles, A.E and Tong, L.S, 1973, Review of two-phase flow instability, *Nuclear Engineering and Design* **25**, pp.165-192.

Caplan, M.Z., Gulshani, P. Holmes, R.W. and Wright, A.C.D, 1983, Experimental and modelling aspects of small break LOCA, *Proceedings of specialists' meeting organized by the IAEA,* Budapest, Hungary.

Chato, J.C, 1963, Natural convection flows in a parallel channel system, *J. Heat Transfer* **85**, pp.339-345.

Chen, W.L, Wang, S.B, Twu, S.S, Chung, C.R. and Chin Pan, 2001, Hysteresis effect in a double channel natural circulation loop, *International Journal of Multiphase Flow,* **27**, 171-187.

Creveling, H.F. De Paz, J.F, Baladi, J.Y. and Schoenhals, R.J, 1975, Stability characteristics of a single-phase free convection loop, *J. Fluid Mechanics*. **67**, pp.65-84.

D'Auria, F. et al., 1997, State of the Art Report on Boiling Water Reactor Stability, OCDE/GD(97)13, OECD-NEA.

Fukuda, K and Hasegawa, S, 1979, Analysis on two-phase flow instability in parallel multichannels, J. Nuclear Science and Technology, **16**, pp.190-199.

Fukuda, K and Kobori, T, 1979, Classification of two-phase flow stability by density-wave oscillation model, *J. Nuclear Science and Technology,* **16**, pp.95-108.

Gartia, M.R., Pilkhwal, D.S., Vijayan P.K., and Saha, D., 2007 Analysis of metastable regimes in a parallel channel single phase natural circulation system with RELAP5/MOD3.2, International Journal of Thermal Sciences 46 1064-1074.

Greif, R, 1988, Natural circulation loops, *J. Heat Transfer* **110**, pp.1243-1258.

Jiang, S.Y, Yao, M.S, Bo, J.H and Wu, S.R, 1995, Experimental simulation study on the start-up of the 5 MW nuclear heating reactor, *Nuclear Engineering and Design* **158**, pp.111-123.

Kakac, S, 1985, Review of two-phase flow instabilities, *J. Pure and Applied Sciences,* **18**, pp.171-252.

Keller, J.B, 1966, Periodic oscillations in a model of thermal convection, *J. Fluid Mechanics* **26**, pp. 599-606.

Krishnan, V.S. and Gulshani, P, 1987, Stability of natural-circulation flow in a Candu-type fuel channel. *Nuclear Engineering and Design* **99**, pp.403–412.

Kukita, Y. Nakamura, H., Tasaka, K. and Chauliac, C, 1988, *Nuclear Science and Engineering*, **99**, pp.289-298.

Lahey, Jr, R.T, Engineering applications of fractal and chaos theory in Modern developments in multiphase flow & heat transfer, *Center for Multiphase Research***,** Rensselaer Polytechnic Institute, Troy, NY - USA 12180-3590

Ledinegg, M, 1938, Instability of flow during natural and forced circulation, *Die Warme,* **61**, pp.891-898, AEC-tr-1861, (1954).

Linzer, W and Walter, H, 2003, Flow reversal in natural circulation systems, *Applied Thermal Engineering,* **23**, pp.2363-2372.

Manish Sharma, P.K. Vijayan, A.K. Nayak, D. Saha and R.K. Sinha, 2002, Numerical study of stability behaviour of single-phase natural circulation in a rectangular loop, *Proceedings of 5th ISHMT-ASME Heat and Mass Transfer Conference* Kolkata, India, Jan. 3-5, pp.1204-1210.

March-Leuba, J. Rey, J.M, 1993, Coupled thermalhydraulic-neutronic instabilities in boiling water reactors: a review of the state-of-the-art, *Nuclear Engineering and Design* **145**, pp.97-111.

Mertol, A. Greif, R, and Zvirin, Y, 1981, The transient, steady state and stability behaviour of a thermosyphon with throughflow, *Int. J. Heat Mass Transfer,* **24**, pp.621-633.

Misale, M, Frogheri, M and Ruffino, P, 1998, Steady-state and stability behaviour of a single-phase natural circulation loop, Heat Transfer 1998, *Proceedings of 11th IHTC, Kyongju, Korea,* August 23-28, vol. 3.

Misale, M, Frogheri M and D'Auria F, 1999, Experiments in natural circulation: Influence of scale factor on the stability behaviour, Misale, M and Mayinger F (Eds.), 109-114, *Proceedings of Eurotherm Seminar N° 63 on Single and Two-phase Natural Circulation,* Genoa, Italy, 6-8 September.

Mochizuki, H, 1994, Flow instabilities in boiling channels of pressure tube type reactor, *Nuclear Engineering Design,* **149**, pp.269-277.

Nayak, A. K. Vijayan, P. K, Saha, D, Venkat Raj V. and Aritomi M, 2000, Analytical study of nuclear-coupled density-wave instability in a natural circulation pressure tube type boiling water reactor, *Nuclear Engineering and Design,* **195**, pp.27-44.

Nayak, A.K, Vijayan, P.K, Jain, V, Saha, D. and Sinha, R.K, 2003, Study on the flow-pattern-transition instability in a natural circulation heavy water moderated boiling light water cooled reactor, *Nuclear Engineering Design,* **225**, pp.159-172.

Nishihara, T., 1997, Oscillatory instability of a single-phase natural circulation loop, *Proceedings of NURETH-8,* Kyoto, Sept. 30-Oct. 4, pp.839-847.

Rao, Y. F. Fukuda K. and Kaneshima, R., 1995, Analytical study of coupled neutronic and thermodynamic instabilities in a boiling channel, *Nuclear Engineering and Design,* **154**, pp.133-144.

Sanders, J, 1988 Stability of single-phase natural circulation with inverted U-tube steam generators *J. Heat Transfer,* **110**, pp.735-742.

Satoh, A, Okamoto, K. and Madarame, H, 1998, Instability of single-phase natural circulation under double loop system, *Chaos, Solitons & Fractals* **9**, pp.1575-1585.

Satou, A, Madarame, H, Okamoto, K, 2001, Unstable behaviour of single-phase natural circulation under closed loop with connecting tube, *Experimental Thermal and Fluid Science* **25**, pp.429-435.

Stenning, A.H. and Veziroğlu, T.N, 1965, Flow oscillation modes in Forced-Convection Boiling, *Proc. 1965 Heat Transfer and Fluid Mechanics Inst.,* pp. 301-316, Stanford University Press, Stanford, California.

Todreas, N.E and Kazimi, M.S., 1990, *Nuclear Systems II, Elements of Thermal Hydraulic Design*, Hemisphere Publications, New York, USA.

Van Bragt, D.D.B. and Van der Hagen, T.H.J.J., 1998. Stability of natural circulation boiling water reactors, Part II-Parametric study of coupled neutronic-thermohydraulic stability. *Nucl. Technology* **121**, pp.52-62.

Van der Hagen, T. H. J. J. Stekelenburg, A. J. C. and Van Bragt D. D. B, 2000, Reactor experiments on type-I and type-II BWR stability, *Nuclear Engineering and Design,* **200**, pp.177-185.

Vijayan, P.K., 1988, Investigations on the single-phase thermosyphon phenomenon in a figure-of-eight loop relevant to pressurised heavy water reactors, *Ph. D. thesis,* Indian Institute of Technology, Bombay.

Vijayan P.K, and Date, A.W, (1990) 'Experimental and theoretical investigations on the steady-state and transient behaviour of a thermosyphon with throughflow in a figure-of-eight loop', *Int. J. Heat Mass Transfer,* **33**, pp.2479-2489.

Vijayan P.K, Venkat Raj V, Nagdaune R.K and Pilkhwal D.S, 1991, Thermosyphon tests and comparison with code predictions for a PHWR', *3rd International Seminar on small and medium sized reactors,* New Delhi, India, August 26-28.

Vijayan, P.K and Date A.W, 1992, The limits of conditional stability for single-phase natural circulation with throughflow in a figure-of-eight loop, *Nuclear Engineering and Design,* **136**, pp.361-380.

Vijayan, P.K, Nayak, A.K, Pilkhwal, D.S, Saha, D. and Venkat Raj, V, 1992, Effect of loop diameter on the stability of single-phase natural circulation in rectangular loops, *Proc. 5th Int. Topical Meet. on Reactor Thermalhydraulics*, NURETH-5, Salt Lake City, UT, Vol.1, pp.261-267.

Vijayan, P.K. Bhojwani, V.K. Bade, M.H. Sharma, M. Nayak, A.K. Saha D. and Sinha, R.K, 2001, Investigations on the effect of heater and cooler orientation on the steady state, transient and stability behaviour of single-phase natural circulation in a rectangular loop, BARC/2001/E/034.

Vijayan, P.K., Manish Sharma, Pilkhwal, D.S. Saha D, Sinha, R.K, Bhojwani V.K. and Sane N. K, 2004, Experimental and numerical investigations on the nature of the unstable oscillatory flow in a single-phase natural circulation loop, HMT-2004-C100, *6th ISHMT/ASME Heat and Mass Transfer Conference,* Kalpakkam, India, Jan. 5-7.

Vijayan, P.K., Sharma M. and Saha, D. 2007, Steady state and stability characteristics of single-phase natural circulation in a rectangular loop with different heater and cooler orientations, Experimental Thermal and Fluid Science 31, 925-945.

Welander, P., 1957, Note on the self-sustained oscillations of a simple thermal system, *Tellus*, **9**, pp.419-420.

Welander, P, 1967, On the oscillatory instability of a differentially heated loop, *J. Fluid Mech.* **29**, pp.17-30.

Yadigaroglu, G., 1978, Two-phase flow instabilities and propagation phenomena, in Thermohydraulics of two-phase systems for industrial design and nuclear engineering, J.M. Delhaye, M. Giot and M.L. Reithmuller, A Von Karman Institute Book, Hemisphere Publishing Corporation, Washington.

Yadigaroglu, G. and Bergles, A.E., 1969, An experimental and theoretical study of density-wave oscillations in two-phase flow, MIT rept. DSR 74629-3 (HTL 74629-67), 1969.

Zvirin, Y, 1985, The instability associated with the onset of motion in a thermosyphon, *Int. J. Heat Mass Transfer,* **28**, pp.2105-2111.

Zvirin, Y., 1981, A review of natural circulation loops in pressurised water reactors and other systems, *Nucl. Eng. Des.* **67**, pp.203-225.

Zuber, N., 1966, An analysis of thermally induced flow oscillations in the near critical and supercritical thermodynamic region, NAS 8-11422, final rept.

APPENDIX-1: Multiple Steady States in Single-phase NCLs

Consider a liquid filled uniform diameter loop as shown in Fig. A1.1. The 1-D governing equations for incompressible NC flow in the loop can be written as

$$\frac{\partial W}{\partial x} = 0$$

$$\frac{L_t}{A}\frac{dW}{dt} = g\oint \rho dz - \frac{fL_t W^2}{2D\rho A^2} + \frac{KW^2}{2\rho A^2}$$

$$\frac{\partial T}{\partial t} + \frac{W}{A\rho}\frac{\partial T}{\partial x} - \alpha\frac{\partial^2 T}{\partial x^2} = \begin{Bmatrix} \frac{4q}{D\rho Cp} & 0 < x < x_h & heater \\ 0 & x_h < x < x_{hl} \quad and \quad x_c < x < L_t & pipes \\ -\frac{4U}{D\rho Cp}(T - T_s) & x_{hl} < x < x_c & cooler \end{Bmatrix}$$

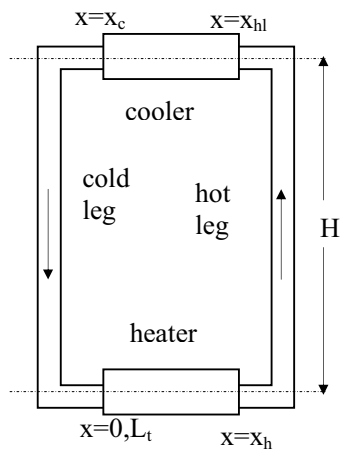

FIG. A1.1 : A uniform diameter rectangular loop

The integral momentum equation for the steady flow can be written as

$$(\rho_c - \rho_h)gH = \frac{pL_t \mu^b W^{2-b}}{2D^{1+b}\rho A^{2-b}} + \frac{KW^2}{2\rho A^2}$$

In writing the above equation, the form loss coefficient was considered to be constant and the friction coefficient was assumed to be given by the following equation:

$$f = \frac{p}{\mathrm{Re}^b}$$

It may be noted that the LHS of the above equation is a constant for a specified power. Hence, the steady state flow equation is a polynomial and it can have as many roots as the order of the polynomial. Depending on the value of the exponent of the friction factor correlation, the above equation can have many roots. In the case of laminar flow with b=1, it can be shown that there exists only one steady state solution with positive W. In case of transients, also, we cannot rule out the possibility of multiple steady state solutions.

APPENDIX-2: Flow behaviour in a parallel channel NC system

Unequally heated parallel channel systems can exhibit interesting flow behaviours during natural circulation. To understand the phenomenon, we consider a NCS with a large number of parallel vertical channels (see Fig. A2.1) connected between a common inlet and an outlet header (or plenum). It also has an unheated downcomer connected between the two headers. In such a parallel channel system, it must be recognized that there are two mutually competing driving forces, one between the downcomer and each channel and the other between two unequally heated channels. If the latter is dominant for any two channels, then the channel with low power will flow in the reverse direction.

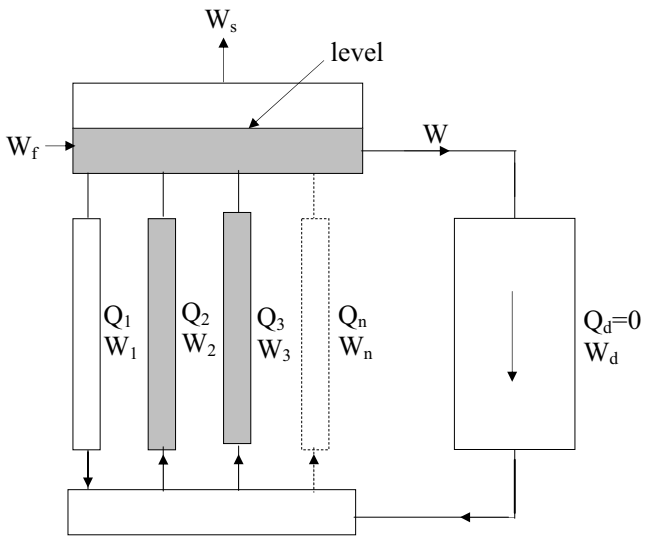

FIG. A2.1: A NCS with n parallel vertical unequally heated channels

To simplify the analysis further, we replace the n-channel system with the schematic shown in Fig. A2.2 where the lumped channel represents all but two of the individual channels of the n-channel system. Rest of the loop remains same as in Fig. A2.1. When all the channels are equally heated, one would expect upward flow in all the vertical channels. However, since channel powers are different, the average density is different in individual channels and in such circumstances, it is possible to form a closed natural circulation loop between any two channels. To illustrate this further let us consider that the system shown in Fig. A2.2 was operating under steady state conditions with up flow in all heated channels. At this time, we have instantaneously brought down the channel-1 power to zero value and allow it to attain steady state. Now our task is to find out the steady flow direction in channel-1 for both single-phase and two-phase condition.

Single-phase PCS

Under steady state condition, the heat generated in the parallel channels is rejected to the cooling water through a coil inserted in the outlet plenum as shown in the figure A2.2. Let us focus our attention to the closed loop formed by the downcomer with channel-1. To conform to the downcomer flow direction, the flow must be upward in the unheated channel-1. Now, let us examine the pressure drops in the external circuit (from the outlet header/plenum through the downcomer to the inlet header/plenum) as well as the internal circuit (from the inlet header through the core to the outlet header/plenum). For convenience in calculation of the gravitational pressure drops, let H be the elevation difference between the lines BB and AA. The pressure drop Δp_e (P_b-P_a) for the external circuit through the downcomer can be written as

$$\Delta p_e = -\rho_d g H + \left(\Delta p_f\right)_e \qquad \text{(A2.1)}$$

Where Δp_f is the irreversible frictional pressure loss in the external circuit. Similarly, the total pressure drop, Δp_i (P_a-P_b) in the internal circuit through channel-1 is obtained as

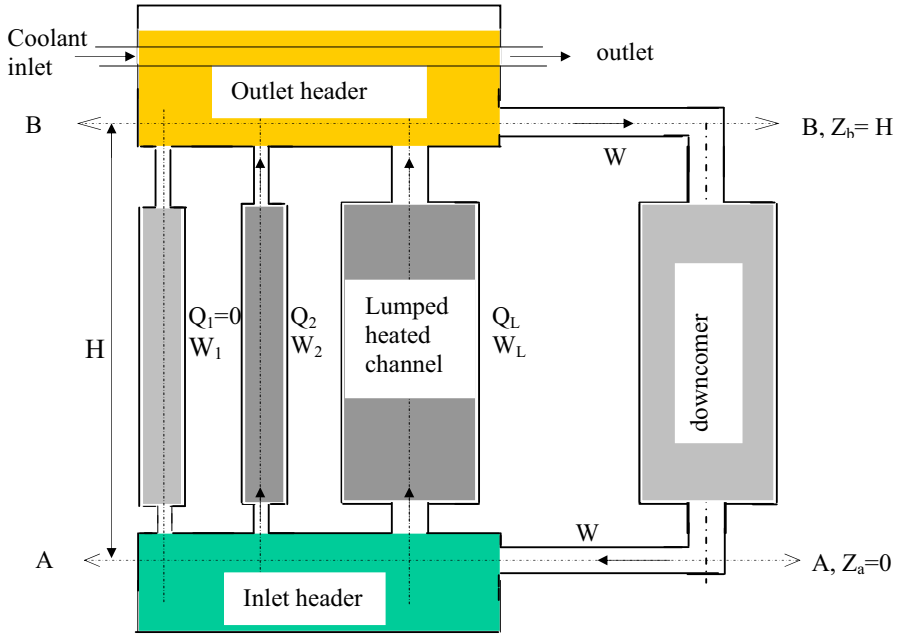

FIG. A2.2: Single-phase Parallel Channel System

$$\Delta p_i = \rho_1 g H + (\Delta p_f)_1 \tag{A2.2}$$

Since the external and the internal circuit form a closed loop, we obtain

$$\Delta p_e + \Delta p_i = 0\,;\, or\ 0 = gH(\rho_1 - \rho_d) + (\Delta p_f)_e + (\Delta p_f)_1 \tag{A2.3}$$

Since channel-1 is unheated, $\rho_1 = \rho_d$ leading to

$$(\Delta p_f)_e + (\Delta p_f)_1 = 0 \tag{A2.4}$$

Note that there is a downward flow in the external circuit through the downcomer caused by the other heated channels. Hence $(\Delta p_f)_e$ is non-zero and therefore $(\Delta p_f)_1$ is also non-zero by the above equation. Considering that both $(\Delta p_f)_e$ and $(\Delta p_f)_1$ are irreversible pressure drops, the above result is possible only if the flow direction in the internal circuit is opposite to that in the external circuit. Considering clockwise flow as positive, we can rewrite Eq. (A2.4) as

$$\sum_{i=1}^{N}\left(\frac{fL}{DA^2} + \frac{K}{A^2}\right)_i \frac{W_d|W_d|}{2\rho_d} + \sum_{i=1}^{N}\left(\frac{fL}{DA^2} + \frac{K}{A^2}\right)_i \frac{-W_1|W_1|}{2\rho_d} = 0 \tag{A2.5}$$

Thus, any unheated channel in a system of parallel channels under NC flow cannot have stable upflow. This is one of the fundamental differences between forced and natural circulation parallel channel systems.

Two-phase Parallel channel system

The situation can be schematically represented as shown in Fig. A2.3. Normally in two-phase loops also, the downcomer will be in single-phase condition. As a result, the same derivation given above is also applicable for two-phase loops. The only difference is in calculating the frictional pressure loss in channel-2. Here we have to consider the two-phase multiplier and the acceleration pressure drop in the two-phase region of channel-2. However, the conclusions do not change.

In practice the flow in channel-1 can be in the reverse direction if its power is less than a critical value. Linzer and Walter (2003) have presented a criterion for flow reversal for two-phase parallel channel systems.

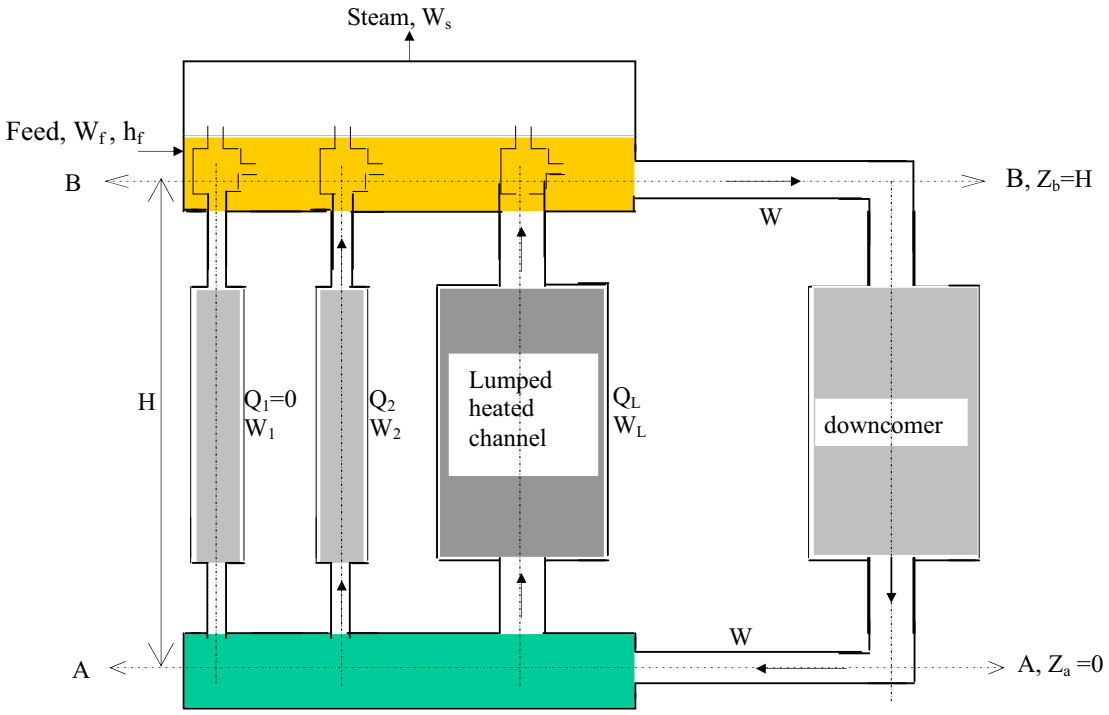

FIG. A2.3: Two-phase parallel channel system